SNAP-TITE 2015 RETAIL PRICE LIST

Effective Date:
1.1.2015

Snap-Tite M/F Joint Pipe
(Item Number listed as Pipe Diameter x Pipe Lay Length)
(ST designates Snap-Tite)

Item Number/Catalog Part	OD Size (inches)	Average ID Size (inches)	Description	Lay Length (feet)	List Price per Piece
10X11ST	10.75	10.05	M/F Snap-Tite Liner	11	$226.16
10X21ST	10.75	10.05	M/F Snap-Tite Liner	21	$319.41
12X11ST	12.75	11.92	M/F Snap-Tite Liner	11	$300.30
12X21ST	12.75	11.92	M/F Snap-Tite Liner	21	$431.13
14X11ST	14	13.09	M/F Snap-Tite Liner	11	$323.09
14X24ST	14	13.09	M/F Snap-Tite Liner	24	$550.08
16X11ST	16	14.96	M/F Snap-Tite Liner	11	$391.93
16X24ST	16	14.96	M/F Snap-Tite Liner	24	$683.76
18X11ST	18	16.83	M/F Snap-Tite Liner	11	$491.59
18X24ST	18	16.83	M/F Snap-Tite Liner	24	$860.24
20X9ST	20	18.7	M/F Snap-Tite Liner	9	$588.06
20X24ST	20	18.7	M/F Snap-Tite Liner	24	$1,071.84
22X9ST	22	20.57	M/F Snap-Tite Liner	9	$655.38
22X24ST	22	20.57	M/F Snap-Tite Liner	24	$1,240.32
24X9ST	24	22.44	M/F Snap-Tite Liner	9	$729.81
24X24ST	24	22.44	M/F Snap-Tite Liner	24	$1,426.08
26X9ST	26	24.3	M/F Snap-Tite Liner	9	$814.59
26X24ST	26	24.3	M/F Snap-Tite Liner	24	$1,637.52
28X9ST	28	26.17	M/F Snap-Tite Liner	9	$902.52
28X24ST	28	26.17	M/F Snap-Tite Liner	24	$1,857.36
30X9ST	30	28.04	M/F Snap-Tite Liner	9	$1,085.04
30X24ST	30	28.04	M/F Snap-Tite Liner	24	$2,180.88
32X9ST	32	29.91	M/F Snap-Tite Liner	9	$1,273.68
32X24ST	32	29.91	M/F Snap-Tite Liner	24	$2,520.72
36X9ST	36	33.65	M/F Snap-Tite Liner	9	$1,496.16
36X24ST	36	33.65	M/F Snap-Tite Liner	24	$3,074.40
42X9ST	42	39.26	M/F Snap-Tite Liner	9	$1,875.42
42X24ST	42	39.26	M/F Snap-Tite Liner	24	$4,022.40
48X9ST	48	44.87	M/F Snap-Tite Liner	9	$2,495.88
48X24ST	48	44.87	M/F Snap-Tite Liner	24	$5,300.88
54X9ST	54	50.48	M/F Snap-Tite Liner	9	$3,001.05
54X24ST	54	50.48	M/F Snap-Tite Liner	24	$6,552.24
63X9ST	63	58.89	M/F Snap-Tite Liner	9	$4,069.89
63X24ST	63	58.89	M/F Snap-Tite Liner	24	$9,067.68

Snap-Tite
ISCO Industries
P.O. Box 4545
926 Baxter Avenue
Louisville, KY 40204

Toll Free: 1-800-CULVERT
Office: (502) 318-6651
Fax: (502) 238-8102

SNAP-TITE 2015 RETAIL PRICE LIST

Effective Date:
1.1.2015

Snap-Tite M/F Joint Oval Pipe
(Product listed as Pipe Rise x Pipe Span x Pipe Lay Length)
(STO designates Snap-Tite Oval)

Item Number/ Catalog Part	OD Size (inches)	Average ID Size (inches)	Description	Equivalent Round (inches)	Lay Length (feet)	List Price per Piece
1623X9STO	16.5X23	15.1X21.7	M/F Snap-Tite Liner Oval	20	9	$931.77
1623X24STO	16.5X23	15.1X21.7	M/F Snap-Tite Liner Oval		24	$1,988.16
1726X9STO	17X26	15.6X24.6	M/F Snap-Tite Liner Oval	22	9	$999.00
1726X24STO	17X26	15.6X24.6	M/F Snap-Tite Liner Oval		24	$2,157.12
1829X9STO	18X29	16.4X27.1	M/F Snap-Tite Liner Oval	24	9	$1,073.53
1829X24STO	18X29	16.4X27.1	M/F Snap-Tite Liner Oval		24	$2,342.40
2133X9STO	21X33.5	19.2X33.6	M/F Snap-Tite Liner Oval	28	9	$1,311.57
2133X24STO	21X33.5	19.2X33.7	M/F Snap-Tite Liner Oval		24	$2,948.64
2236X9STO	22.5X36	20.3X34	M/F Snap-Tite Liner Oval	30	9	$1,494.18
2236X24STO	22.5X36	20.3X34	M/F Snap-Tite Liner Oval		24	$3,271.92
2637X9STO	26X37	23.9X34.9	M/F Snap-Tite Liner Oval	32	9	$1,682.91
2637X24STO	26X37	23.9X34.9	M/F Snap-Tite Liner Oval		24	$3,611.76
3041X9STO	30X41	27.7X38.7	M/F Snap-Tite Liner Oval	36	9	$1,970.73
3041X24STO	30X41	27.7X38.7	M/F Snap-Tite Liner Oval		24	$4,339.68
3448X9STO	34X48.5	31.3X45.9	M/F Snap-Tite Liner Oval	42	9	$2,382.75
3448X24STO	34X48.5	31.3X45.9	M/F Snap-Tite Liner Oval		24	$5,375.28
3955X9STO	39X55.5	35.9X52.3	M/F Snap-Tite Liner Oval	48	9	$3,003.21
3955X24STO	39X55.5	35.9X52.3	M/F Snap-Tite Liner Oval		24	$6,653.76
4363X9STO	43X63	39.5X59.5	M/F Snap-Tite Liner Oval	54	9	$3,557.52
4363X24STO	43X63	39.5X59.5	M/F Snap-Tite Liner Oval		24	$8,035.68
4760X9STO	47X60	43.5X59.6	M/F Snap-Tite Liner Oval	54	9	$3,557.52
4760X24STO	47X60	43.5X59.6	M/F Snap-Tite Liner Oval		24	$8,035.68
5272X9STO	52X72.5	47.9X68.1	M/F Snap-Tite Liner Oval	63	9	$4,675.41
5272X24STO	52X72.5	47.9X68.1	M/F Snap-Tite Liner Oval		24	$10,682.16
5867X9STO	58X67.5	53.9X63.5	M/F Snap-Tite Liner Oval	63	9	$4,675.41
5867X24STO	58X67.5	53.9X63.5	M/F Snap-Tite Liner Oval		24	$10,682.16

Pipes can be oval to a variety of shapes within given limits. The oval shapes listed are the maximum deflection these pipes can be deflected to.

Snap-Tite
ISCO Industries
P.O. Box 4545
926 Baxter Avenue
Louisville, KY 40204

Toll Free: 1-800-CULVERT
Office: (502) 318-6651
Fax: (502) 238-8102

SNAP-TITE 2015 RETAIL PRICE LIST

Effective Date:
1.1.2015

HydroBell Inlet Device
(HDPE Fabricated HydroBells & Fiberglass HydroBells)
(HDPE HydroBells fabricated with DR32.5 male ends unless otherwise required)

Item Number/Catalog Part	OD Size (inches)	Description	List Price per Piece
10HBPE	10.75	Polyethylene HydroBell x Male Snap-Tite End	$800.0 0
12HBPE	12.75	Polyethylene HydroBell x Male Snap-Tite End	$950.00
14HBPE	14	Polyethylene HydroBell x Male Snap-Tite End	$1,050.00
16HBPE	16	Polyethylene HydroBell x Male Snap-Tite End	$1,150.00
18HBPE	18	Polyethylene HydroBell x Male Snap-Tite End	$1,750.00
20HBPE	20	Polyethylene HydroBell x Male Snap-Tite End	$2,200.00
22HBPE	22	Polyethylene HydroBell x Male Snap-Tite End	$2,800.00
24HBPE	24	Polyethylene HydroBell x Male Snap-Tite End	$3,500.00
26HBPE	26	Polyethylene HydroBell x Male Snap-Tite End	$4,500.00
28HBPE	28	Polyethylene HydroBell x Male Snap-Tite End	$5,000.00
30HBPE	30	Polyethylene HydroBell x Male Snap-Tite End	$6,500.00
32HBPE	32	Polyethylene HydroBell x Male Snap-Tite End	$9,400.00
36HBPE	36	Polyethylene HydroBell x Male Snap-Tite End	$12,950.00
42HBPE	42	Polyethylene HydroBell x Male Snap-Tite End	$14,120.00
48HBPE	48	Polyethylene HydroBell x Male Snap-Tite End	$15,885.00
54HBPE	54	Polyethylene HydroBell x Male Snap-Tite End	$18,000.00
63HBPE	63	Polyethylene HydroBell x Male Snap-Tite End	$20,590.00
10HBFG	10.75	Fiberglass HydroBell x Flexible Coupling	$390.00
12HBFG	12.75	Fiberglass HydroBell x Flexible Coupling	$475.00
14HBFG	14	Fiberglass HydroBell x Flexible Coupling	$525.00
16HBFG	16	Fiberglass HydroBell x Flexible Coupling	$600.00
18HBFG	18	Fiberglass HydroBell x Flexible Coupling	$750.00
20HBFG	20	Fiberglass HydroBell x Flexible Coupling	$1,000.00
22HBFG	22	Fiberglass HydroBell x Flexible Coupling	$1,500.00
24HBFG	24	Fiberglass HydroBell x Flexible Coupling	$2,000.00
26HBFG	26	Fiberglass HydroBell x Flexible Coupling	$2,250.00
28HBFG	28	Fiberglass HydroBell x Flexible Coupling	$2,500.00
30HBFG	30	Fiberglass HydroBell x Flexible Coupling	$3,000.00
32HBFG	32	Fiberglass HydroBell x Flexible Coupling	$3,500.00
36HBFG	36	Fiberglass HydroBell x Flexible Coupling	$4,000.00
42HBFG	42	Fiberglass HydroBell x Flexible Coupling	$4,500.00
48HBFG	48	Fiberglass HydroBell x Flexible Coupling	$5,000.00
54HBFG	54	Fiberglass HydroBell x Flexible Coupling	$5,500.00
63HBFG	63	Fiberglass HydroBell x Flexible Coupling	$6,500.00

Snap-Tite
ISCO Industries
P.O. Box 4545
926 Baxter Avenue
Louisville, KY 40204

Toll Free: 1-800-CULVERT
Office: (502) 318-6651
Fax: (502) 238-8102

SNAP-TITE 2015 RETAIL PRICE LIST

Effective Date:
1.1.2015

Ideal Profile Wall Pipe
(F894)
(Threaded and Welded options)

Contact Larry Caple for pricing
Toll free phone number: 800-345-3726
Email: larry.caple@isco-pipe.com

Aquatic Life Passage Pipe
(Interior Open Profile)
(Bell & Spigot Joints)

Contact Larry Caple for pricing
Toll free phone number: 800-345-3726
Email: larry.caple@isco-pipe.com

No-Dig Snap-Tite Solutions For All Storm Drainage Systems

Snap-Tite Culvert Lining System

MEETS AASHTO STANDARD • M326 •

Snap-Tite is the complete no-dig culvert rehab solution. Our patented design and installation system renews a failing culvert without removing deteriorated pipe.

Most jobs can be completed with a backhoe, shovels, a come-a-long and chains — without the safety issues involved in closing a road and coping with traffic control. Available in lengths from 2 to 50 feet and 8" to 132" outside diameter.

Because all culverts are not round...

Since one-third of exisiting culverts are arched, Snap-Tite® has come up with a solution: oval pipe. It has the same benefits as smooth-wall HDPE Snap-Tite®, yet made for a better fit into an existing arched culvert.

The Snap-Tite® Culvert Lining System actually outperforms both the round and oval concrete and corrugated metal pipes it rehabilitates. Lightweight, flexible, durable HDPE has an indefinite service life and the Snap-Tite® culvert lining joining system assures a water-tight seal at all joints.

The Hydro-Bell Inlet Control Device

The Hydro-Bell inlet device is the first device introduced in recent years that uses newer materials to capitalize on the effects of culvert fluid dynamics. Through this design, it is now possible to maximize the hydraulic efficiency (and/or reduce head loss) of a culvert.

- An average flow increase of 30% compared to plain end headwalls under inlet control conditions
- No special training or tools required to instal
- As head pressure increases, the Snap-Tite® Hydro-Bell system flow rate increases
- Same reliable HDPE material and long service life as the Snap-Tite® culvert liner
- "Snaps" onto the inlet end of the Snap-Tite culvert liner
- Hydro-Bell makes Snap-Tite® the ideal hydraulic option to line failing RCP culverts
- Available in all Snap-Tite® liner sizes 6" through 63"

800-CULVERT **www.culvert-rehab.com**

SnapTite®

Big culverts need big pipe...

Most pipe materials historically used for culverts begin to rust, abrade and corrode the day they are installed. Today there is a better option. Whether for new construction, direct replacement of failed culverts or rehabilitation to prevent failure of deteriorated culverts, large diameter HDPE is rapidly becoming the material of choice for DOTs and other agencies responsible for America's roads.

Dam Rehabilitation Using Snap-Tite

It's the installer's safest and most cost effective solution: no digging and no diving! The Snap-Tite joining system eliminates the need to excavate at the spillway and the need to dive to join the new liner to the new HDPE rier.

A Snap-Tite culvert liner system is one continuous, leak-free liner.

- No excavation or costly restoration
- No Traffic diversions
- No interruption to service
- Better flow and chemical resistance
- Eliminates infiltration and ex-filtration problems.

Thread-Liner: The Pipeline Rehabilitation Solution

ThreadLiner

Special threaded sections of polyethylene pipe are inserted into the old sewer, forming one continuous, leak-free liner. Once anchored and sealed by grouting, the new system is virtually maintenance-free. This system features a cost-effective installation, improved flow and dramatically longer life. Available in sizes from 3" to 42" outside diameter (made to the lengths required).

Best for:

- Sanitary Sewer Relining
- Industrial Pipe Relining
- Culvert Relining
- Dam Rehabilitation

A typical deteriorated culvert close to failure, potentially leading to road collapse and danger to the motoring public.

A Snap-Tite® installation. Faster. Easier. Safer.

Although every culvert project is different depending on location of the culvert and condition of materials in place, almost any culvert can be rehabbed using the Snap-Tite® Culvert Lining System.

MEETS AASHTO STANDARD • M326 •

The same culvert, excavated and prepared for Snap-Tite® rehab. Since the pipe was so deteriorated, this project required the installation of a corrugated metal sleeve to accept the new pipe. A concrete footer was also poured.

The first piece of Snap-Tite® HDPE is lowered into position and inserted into the host pipe.

A gasket is installed on the next piece of pipe, assuring a watertight seal when connected, meeting ASTM D3212 requirements.

The second piece of pipe is lowered into position, and lined up with the first piece.

Using chains and pressure from the excavator, the two pieces of pipe are 'snapped' together. The process is repeated until connected sections of Snap-Tite® are pushed through the entire length of the culvert.

Different length PVC pipes that will deliver the grout flow are installed, and both ends of the pipe are sealed.

Workers prepare the low density cellular grout that will be pumped into the pipe.

The grout is pumped into the entire length of the pipe, filling in all voids between the new and host pipe, and the areas between the pipe and roadway.

Snap Tite®

The totally rehabbed Snap-Tite® culvert. Nearly all the work was completed off-road in the culvert itself. No road closure or traffic interruption occurred.

Make the connection! For more information visit **www.culvert-rehab.com** or call us at **1-800-CULVERT**

Snap-Tite® Culvert Lining System

Snap Tite®

MEETS AASHTO STANDARD • M326 •

www.culvert-rehab.com • 1-800-CULVERT

The problem.

State Departments of Transportation, counties and municipalities are facing a critical problem. Culverts installed forty to fifty years ago are failing at an alarming rate nationwide. Thousands of corrugated metal culverts are so significantly rusted that a danger of sink holes, road collapse or flooding exists. Concrete culverts have cracked or pulled apart at the joints, creating similar dangerous scenarios. Conventional repair methods *of the past* have been to dig and replace the failed pipe. There is now a dash to find a solution that is economically feasible, quick, and avoids road closures and detours for the motoring public.

The no-dig trenchless solution.

The Snap-Tite® HDPE Lining System is ideal for failing metal and concrete culverts.

Today, there's an economical, no-dig solution with field-tested benefits, proving that rehabilitation is a better solution — with the Snap-Tite® Culvert Lining System.

Utilizing solid wall high density polyethylene pipe (HDPE), a Snap-Tite® system actually outperforms the pipe it replaces. HDPE's smooth interior surface delivers better throughput – and with the inclusion of a gasket, assures a watertight seal at all joints, meeting ASTM D3212 requirements.

MEETS AASHTO STANDARD • M326 •

Snap-Tite's® patented male/female machining at each end of the HDPE allows it to be 'snapped' together, piece by piece, and pushed into the full length of the existing pipe. It is available in lengths from 2 feet to 50 feet long, and is available for existing culverts with diameters from 8 inches to 84 inches. Unlike other so-called 'rehab systems,' the annular space between the host pipe and the new Snap-Tite® pipe is filled with a low density cellular grout, which fills in any voids between the roadway and culvert, delivering a truly 'rehabbed' culvert.

Snap-Tite® is easy to install. Nearly all the culvert renewal can be done off road with minimum disturbance to the right of way, without road closures. Most jobs can be completed with a backhoe, shovels, a come-a-long and chains – and most highway or road contractors can use their own crews without the need for special training or specialized equipment.

Flow Comparison Snap-Tite® vs. Corrugated Metal Pipe — I.D.= Interior Dimension O.D.= Outer Dimension

Existing CMP	15" I.D.	18" I.D.	21" I.D.	24" I.D.	30" I.D.	36" I.D.	42" I.D.	48" I.D.	54" I.D.	60" I.D.	72" I.D.	84" I.D.
O.D. Snap-Tite	12.75" O.D.	14" O.D.	18" O.D.	20" O.D.	24" O.D.	32" O.D.	36" O.D.	42" O.D.	48" O.D.	54" O.D.	63" O.D.	63" O.D.
% of Flow	142%	112%	145%	135%	121%	160%	145%	154%	160%	166%	154%	102%

n CMP = 0.024, n Snap-Tite® = 0.00914

Other size Snap-Tite® liners are available for the existing sizes above.

The bottom line...

Snap-Tite® is the better solution for three key reasons:

1 The rehabilitated culvert will have the same – or greater flow – than the existing culvert. This is a true 'rehab' since the space between the host pipe and the Snap-Tite® pipe, as well as the space between the pipe and roadway, is filled with cellular grout.

2 Installation is easier, safer and less disruptive to traffic and property. Existing crews can be used without the need for special training or specialized equipment.

3 The joints are watertight and secure, and the HDPE delivers a nearly indefinite service life.

Turn page for installation photographs

DESIGN GUIDE

SnapTite®

WWW.CULVERT-REHAB.COM | 800-CULVERT

VERSION 4.0 2013

Snap-Tite®: The best and safest way to rehab your culvert and spillway projects. The Snap-Tite® joint and installation system allows replacement of failing systems without the need to remove existing pipe by excavation. Snap-Tite® can be typically installed with a backhoe, trackhoe, come-a-longs, and chains.

Snap-Tite®: The proven solution in the field. We have eliminated the problem of having to excavate aged culverts and spillways. Specially manufactured sections of polyethylene pipe are inserted into the old culvert or spillway, forming one continuous, leak-free liner. Once grouted in place, the new system is virtually maintenance-free.

It's a fast installation with no special training or equipment. It meets the job's requirements. The Snap-Tite® pipe lining system is unmatched in ease of installation. Since it typically weighs as little as 10% of concrete, ductile iron and clay pipes, it is much easier to handle. Maintenance departments can use their own crews – no special training or specialized equipment is necessary.

Everything for the installer.
Snap-Tite® pipe comes in lengths ranging from 2 to 50 feet and sizes from 6- to 63-inch OD. Facing a damaged pipe with limited access? Not a problem with Snap-Tite®. Short segments can be fastened together, all with strong water-tight seals in a small working space.

These advantages also make Snap-Tite® the preferred answer for dam spillway renewal. Typical applications are:

- CMP Culvert & Spillway Rehabilitation
- Ductile Iron Culvert & Spillway Rehabilitation
- Concrete Culvert & Spillway Rehabilitation

See what Snap-Tite® can do for you. It may be the last solution you'll ever need for culvert and spillway rehab problems. Simple installation means light duty equipment, less manpower, minimal disturbance of right-of-way, and indefinite service life. When considering these benefits, it becomes clear that the Snap-Tite® system is the most cost-effective way to rehabilitate deteriorating culvert and spillway systems.

Effective Strengths to depend on.

- Safest solution for installers and motorists
- Save 50% compared to pipe replacement
- No interruption of services
- Little or no surface damage
- Faster project completion
- Improved hydraulic capacity
- Sealed system prevents leakage
- Long service life
- An effective, economical system promotes a cleaner, healthier environment

Snap-Tite® Product Support
With the Snap-Tite® sales force and application engineers you get more than just order takers. They've literally been in the trenches and have extensive customer service backgrounds. They're specially trained to answer the hard questions and give the right recommendations for your unique application needs.

Contents

Chapter 1
Snap-Tite®: Your Culvert Lining Solution 4

Chapter 2
Snap-Tite® High-Density Polyethylene (HDPE) Pipe 8

Chapter 3
Hydraulics 14

Chapter 4
Oval Pipe 26

Chapter 5
Ease of Installation 30

Chapter 6
End Seals, Wing Walls and Bulkheads 44

Chapter 7
Annular Space Grouting 46

Chapter 8
Structural Design 60

Chapter 9
RPS Minimum and Maximum Cover Limitations 80

Chapter 10
Thread-Liner 82

Chapter 11
ISCO Aquatic Life Passage 86

Chapter 12
Handling and Storage 92

Chapter 13
Specifications 96

Chapter 14
Frequently Asked Questions 102

Chapter 15
Glossary of Terms 106

Chapter 1

Snap-Tite®: Your Culvert Lining Solution

Before rehabilitation

After rehabilitation with Snap-Tite®

The Snap-Tite® HDPE Culvert Lining System was designed and developed as a safe and permanent solution for repairing failing culverts. Many existing culverts are 50 years old and beyond their design life. In the United States, the majority of our highway system was built in the 1950s. The culverts built under these systems were made of either corrugated metal or concrete with a design life of approximately 40-50 years. Repairing these culverts before they enter the critical state of collapse is imperative to the safety of the public.

What happens to a road when the culvert running beneath it is in failure mode?

The picture in Figure 1 shows pothole damage found at the road surface above the culvert along with other road damage. Deteriorating culverts come quickly to mind when roadway damage caused by corroded, rusted and washed-out culverts occurs.

Pavement failure occurs when the soil beneath the road surface is washed away (see Figures 2 through 4). This soil movement and loss of bedding creates a void beneath the road.

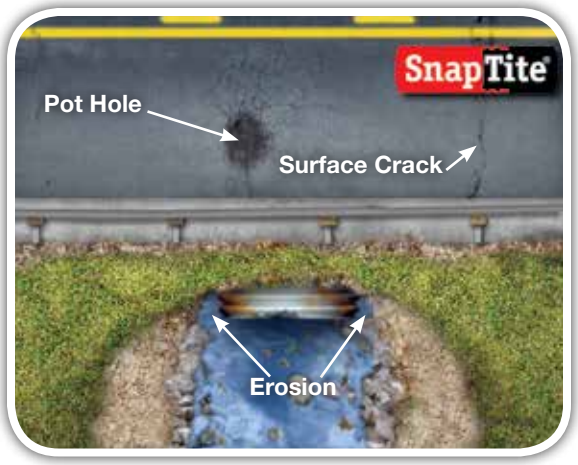

Figure 1

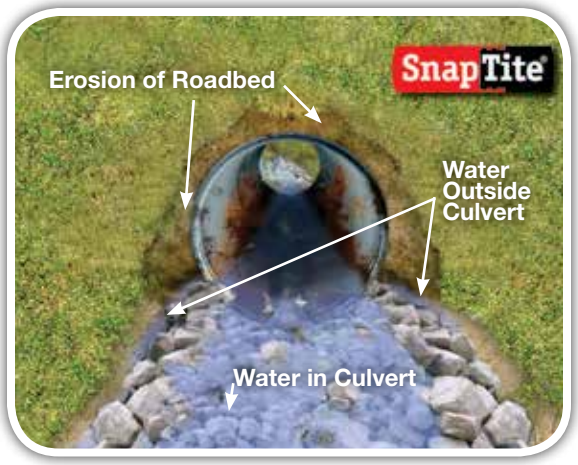

Figure 2

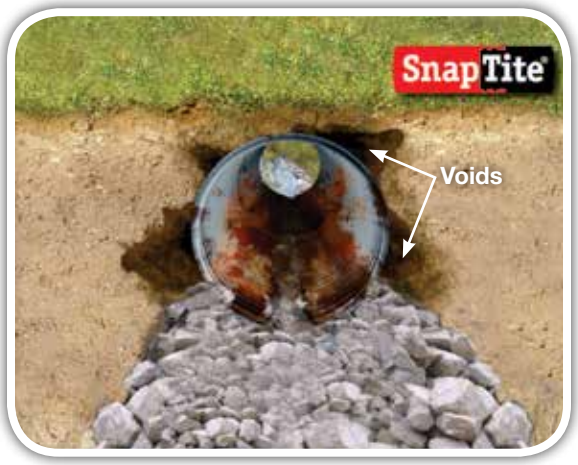

Figure 3

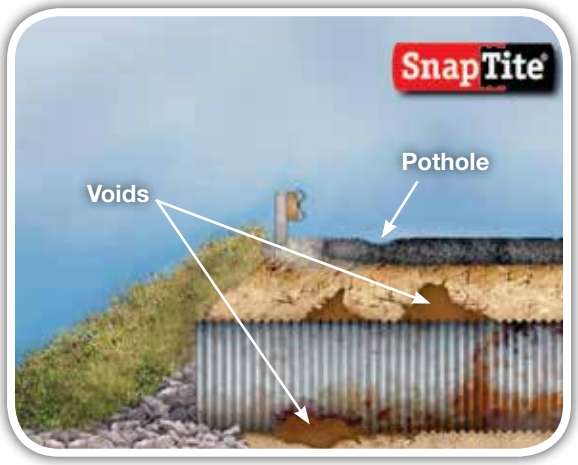

Figure 4

This makes the roadway unstable. Patching the road is only a short-term answer and does not address the reason for the failure. The reality is the culvert has failed. While it's easy to see this when it's shown to us, culvert damage and aging isn't something we look for everyday.

Many automobile accidents and even some fatalities have been attributed to failing culverts. Replacement is an expensive, time-consuming, labor-intensive process which causes traffic headaches and collateral damage to cars, trucks and neighboring property.

The Snap-Tite® HDPE Culvert Lining System is a unique culvert lining solution that not only restores the existing culvert, but also addresses the critical safety and maintenance issues presented by the soil voids.

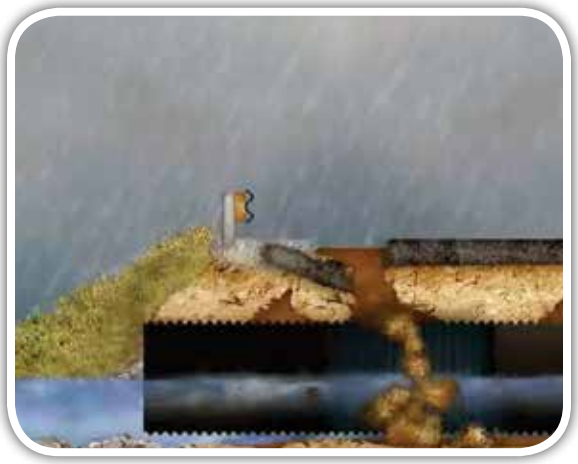

Figure 5

Figure 6

Snap-Tite® is made from solid-wall high density polyethylene (HDPE) pipe with a male and female end that 'snaps' together during installation, which do not increase the inside or outside diameter of the liner pipe. Therefore, there will be no flow restrictions or coupling hang-ups. A water-tight joint is achieved with the inclusion of the gasket provided (see Figure 8).
Snap-Tite® meets the requirements of

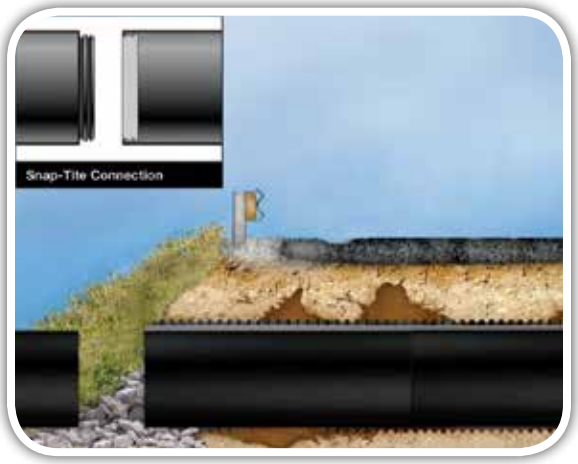

Figure 7

Figure 8

AASHTO M326, a standard for relining culverts in the US. Snap-Tite® is viewed by many users as the permanent solution, with numerous advantages over concrete and corrugated metal pipe (CMP) replacement.

In most cases, Snap-Tite® actually out-performs the concrete and corrugated metal it rehabilitates. Even at smaller diameters than the original pipe, Snap-Tite® allows for better throughput than concrete or corrugated metal due to the smooth wall interior of the pipe. Furthermore, the Snap-Tite® Culvert Lining System is unmatched in ease of installation. Since it typically weighs as little as 10% of conventional materials, it is much easier to handle. Highway departments can use their own crews with no special training or specialized equipment necessary.

Snap-Tite® ranges from 6" to 63" solid-wall HDPE pipe and can be made in lengths from 2 feet up to 50 feet, depending on the project worksite conditions. Because of Snap-Tite®'s ease of installation and variable lengths, 95% of culvert renewal can be done off road. This means increased safety for both your workers and motorists. Traffic disturbance can be a thing of the past; all work is done in the culvert itself, not by digging up roadways. These advantages also make Snap-Tite® the perfect answer for culvert extensions, road-widening, direct burial applications and sewers with limited access.

There are other culvert lining materials available in the marketplace, but the benefits offered by the Snap-Tite® Culvert Lining System such as superior flow capacity, long life cycle and the minimal traffic disruption concerns provided by a trenchless rehabilitation method make it the best overall solution for culvert lining. In addition, it truly is a permanent solution because its patented water-tight joint provides the soil stabilization required for a roadway and culvert to perform.

Chapter 2

Snap-Tite® High-Density Polyethylene (HDPE) Pipe

Introduction

Snap-Tite® HDPE Pipe, sold and distributed by ISCO Industries, Inc., offers a complete package of sales and support to rehabilitate failing culverts throughout the US. Please call 1-800-CULVERT or visit www.culvert-rehab.com for all your culvert lining needs.

Some of the characteristics of Snap-Tite® Solid-wall HDPE Pipe are:

Economical	Flexible
Corrosion Resistant	Mechanically Joined
Hydraulically Smooth	Strong and Ductile
Long Design Life	Weather Resistant
Tappable	Impact Resistant
Chemically Resistant	Freeze Resistant
Easily Installed	Durable
Small to Large Diameters	Abrasion Resistant
Non-Toxic	Inert
Lightweight	Listed and Approved
Reliable	

Important Standards for High Density Polyethylene (HDPE) Pipe

Standards important for Snap-Tite® HDPE pipe relate to the resin the pipe is made from and the standards related to manufacturing sizes and tolerances.

ASTM Standards:
ASTM D3350 Standard Specification for Polyethylene Plastics Pipe and Fittings Materials. This standard defines the physical properties of the resin.

ASTM F714 Standard Specification for Polyethylene (PE) Pipe (SDR-PR) Based on Outside Diameter. This standard is used for most large diameter HDPE pipe (6" to 63") Applications.

ASTM D2321 Standard Practice for Underground Installation of Thermoplastic Pipe for Sewers and Other Gravity Flow Applications.

ASTM F585 Standard Practice for Insertion of Flexible Polyethylene Pipe into Existing Sewers

ASTM D3212 Standard Specification for Joints for Drain and Sewer Plastic Pipes Using Flexible Elastomeric Seals

Industry Standard for Culvert Relining:
AASHTO M326 Polyethylene (PE) Liner Pipe, 300-to1600-mm Diameter, Based on Controlled Outside Diameter

Specifications for HDPE Pipe

Polyethylene piping systems are defined or specified using two important criteria: the ASTM D3350 cell classification and the ASTM F412 thermoplastic piping material designation code. The ASTM D3350 consists of a series of six digits followed by one letter. The six digits equate to the specified level of performance required in six separate physical properties defined within the standard. The final letter specifies the color or UV-resistance requirement. Taken together the D3350 cell classification establishes a minimum range of technical performance for the PE compound used to produce the pipe.

The F412 thermoplastic piping material designation code further defines the performance requirement of the pipe produced from a particular PE compound. This code consists of an abbreviation for the basic material as defined within the ASTM standards. The standardized abbreviation for polyethylene is the term “PE”. This basic polymer designation is then followed by a series of four digits. The first two digits relate directly to specific physical properties for the compound as defined within ASTM D3350. The last two digits are the long-term hydrostatic stress rating as recommended by the Hydrostatic Stress Board of the Plastic Pipe Institute in hundreds of psi. The long-term hydrostatic stress rating is the hydrostatic design basis (HDB) multiplied by the appropriate design factor (DF).

So the thermoplastic piping material designation code follows the form below.

PEXYZZ, the format of the thermoplastic material designation code for PE pipe

Where:
PE indicates polyethylene

X is the characteristic density range for the compound used to make the pipe as defined within ASTM D3350

Y is the characteristic slow crack growth resistance range for the compound used to make the pipe as defined within ASTM D3350

ZZ is the long-term hydrostatic stress at 23° F, expressed in hundreds of psi

Historically, the market for PE pipe was dominated by essentially two primary thermoplastic material designation codes. These were PE2406 and PE3408. In 2005, changes were made to ASTM D3350 to allow for the identification and integration of much higher levels of technical performance in PE piping materials within the North American standards system. This resulted in a temporary proliferation of PE thermoplastic piping material designation codes. Today, we still have a fairly broad selection of material designation codes for PE piping systems throughout the marketplace. However, for all practical purposes, the market for PE pipe is characterized by the three common thermoplastics materials designation codes.

PE2708 – This piping product is produced from a medium density compound as defined in the current version of D3350 and is widely used in natural gas distribution and some specialty applications

PE3608 - This piping product is the legacy product resulting from the old PE3408 thermoplastic piping material designation code that was so widely specified and used prior to 2005. It is not uncommon today to see these piping products dual labeled PE3408/PE3608.

PE4710 - This piping product designation represents the culmination of years of technical research on polymer performance in PE piping and offers the designer or end-user exceptional levels of pipe system performance. For example, the PE4710 piping products support a higher long-term hydrostatic stress rating making the pressure rating for a given wall thickness of pipe 25% higher than a comparable PE3608 piping product. By the same token, these piping products exhibit a significantly higher resistance to slow crack growth. Given the exceedingly high technical performance of the PE4710 piping products, it is no surprise that they meet or exceed all of the technical requirements of the PE3408 or PE3608 piping products. For this reason it is not uncommon to see these piping products dual labeled as PE3408/PE4710 or even triple labeled as PE3408/PE3608/PE4710.

Table 2-1 provides a summary of the different ASTM D3350 cell classifications for each of these materials based on these three primary thermoplastic piping material designation codes.

Table 2-1
Typical Cell Classification
by Current Thermoplastic Piping Material Designation Code

Physical Property	ASTM Test Method	Units	PE2708		PE3608		PE4710	
			Cell Number	Typical Value	Cell Number	Typical Value	Cell Number	Typical Value
Density	D 1505	GR/CM^3	2	>0.925-0.940	3	>0.940-0.947	4	>0.947-0.955
Melt Index	D 1238	GR/10 MIN	3	<0.4-0.15	4	<0.15	4	<0.15
Flexural Modulus	D 790	PSI	3	40,000 -<80,000	5	110,000 - <180,000	5	110,000 - <180,000
Tensile Strength	D 638	PSI	3	2600 - <3000	4	3000 - <3500	4	3000 – < 3500
Resistance to Slow Crack Growth	D 1479	HOURS	7	500 Minimum	6	100 Minimum	7	500 Minimum
Hydrostatic Design Basis, HDB	D 2387	PSI	3	1250	4	1600	4	1600
UV Stabilizer	D 1603	%	E	Colored with UV Stabilizer	C	2% Min Carbon Black	C	2% Min Carbon Black

Notes:

1. *The density provided is base resin density (without the influence of carbon black). Typical PE4710 HDPE pipe has a density of 0.956 to 0.964 with carbon black.*
2. *To be designated a PE4710, the pipe resin must meet certain supplementary requirements established by the Hydrostatic Stress Board (HSB) of the Plastics Pipe Institute (PPI).*

Table 2-2 below provides a simplification of Table 2-1 and illustrates the relative ease with which PE piping products may be specified. Using this approach allows the designer or specifier to accurately designate the appropriate PE piping product through the use of a single thermoplastic piping material designation code and a relatively simple text string that establishes the physical property requirements for seven key performance properties.

Table 2-2
Representative Minimum Cell Classification by Thermoplastic Piping Material Designation Code

Thermoplastic Piping Material Designation Code	Minimum Cell Classification Per ASTM D3350
PE2708	233373E
PE3608	345464C
PE4710	445474C

It should be noted that other PE thermoplastics piping material designation codes do exist and may be encountered in the different markets. However, the three primary PE thermoplastic piping material designations codes of Tables 2-1 and 2-2 represent the principle PE piping products in the market today. For the culvert lining market, HDPE resins with a PE3608 or PE4710 are commonly used for solid-wall piping systems.

The selected thermoplastic piping material designation code and minimum cell classification is then combined with the appropriate production and installation standards to effectively specify a tough, durable PE piping system. A model specification is available in Chapter 13 and available at culvert-rehab.com or by contacting your local Snap-Tite® representative.

Chapter 3
Hydraulics

3-1 Flow in Culverts

Much of the information in this chapter is a summary of information presented by the Federal Highway Administration's (FHWA) Hydraulic Design Series (HDS) No. 4 and No. 5 publications. HDS 4 is titled Introduction to Highway Hydraulics (FHWA 2008a-Fourth Edition) and deals with culverts as "closed conduits" in chapters 7-9. HDS 5 is titled Hydraulic Design of Highway Culverts (FHWA 2012-Third Edition) and is a comprehensive culvert design publication, developed to standardize procedures and simplify analysis of culvert flow. As stated in both documents, flow conditions depend not on just the culvert (or the inserted liner) but also the interaction with upstream and downstream conditions. The choice of a culvert lining or replacement cannot be made merely along the potential flow capacity of a pipe, but also on hydrology (climatological and watershed characteristics), site data, aquatic ecology concerns, maintenance issues and overall economics.

Ideally, culverts are designed to transport water with minimal headwater buildup. Headwater is the water surface elevation on the upstream side of a culvert and provides the energy to force water through a culvert. When a channel waterway is constricted like that of a culvert through an embankment, conveyance capacity is typically reduced. However, the choice of a culvert (and its relining option) is one that can be economically justified, short term and many times long term, against the costs to meet the entire flow criterion. It is not uncommon to accept some increase in upstream water level, or design headwater, as long as it stays below allowable headwater depth or specific distance below the roadway shoulder elevation to prevent overtopping of an embankment and/or roadway.

Historically, a simple approach for comparing culverts was accomplished with a flow rate comparison using Manning's equation. With Manning's equation, the capacity for a pipe as open channel flow (less than full) and gravity full-flow conditions can be approximated. Many existing culverts were designed for 100-year flood conditions and infrequently have water over the top of the inlet, so less than full or gravity full-flow conditions would be expected.

When Snap-Tite® is inserted into another pipe with a higher Manning's "n" factor, it is not uncommon for the same flow to be maintained. For example, when a 36" corrugated metal pipe (CMP) is lined with a 30" Snap-Tite® liner, the calculations show an increase in flow of 35% using Manning's equation. If the existing culvert is not undersized for current hydrological demands, then flow after lining with Snap-Tite® will not be dramatically affected since the capacity of the lined culvert is near that of the old culvert.

3-2 The Manning's Equation

The Manning's equation is used to determine the gravity full-flow condition in storm drain systems.

$$Q = .0006136 \times (d^{8/3}\, S^{1/2})/n$$

Where:

Q = Discharge/flow, cu ft per sec
d = pipe inside diameter, in inches
S = culvert barrel slope (feet/foot)= (h1 – h2)/L
L = pipe length, in feet
h1 = Entry Culvert elevation in feet
h2 = Exit Culvert elevation in feet
n = Manning's factor

3-3 Selection of Manning's Factor

Snap-Tite® is made using solid-wall HDPE pipe. The extrusion of HDPE resin creates a very smooth pipe. The Snap-Tite® joint allows sections of pipe to be joined together mechanically in the field without increasing the OD (outside diameter) or increasing/decreasing the ID (inside diameter) of the liner at the joint. Snap-Tite® Culvert Liner has been tested in full-flow conditions to determine the Manning's factor. Utah State Water Research Laboratory tests determine that an "n" factor of 0.00914 is valid for Snap-Tite® in full-flow conditions, which is consistent for industry standards for the pipe.

Solid-wall thermoplastic pipes appear to remain smooth throughout their lifetime. The surface of some materials may change with time. Based on industry practice, Snap-Tite® and other solid-wall materials are smooth throughout their useful life and the Manning's "n" factor is considered constant.

In low-flow situations, it is possible for sediment to accumulate in a culvert. Sticks, rocks and other debris may collect inside. The condition of a liner is sometimes not the same over its expected life, as cracked, corroded and even deformed liners will affect the smoothness of a pipe and will impact flow. These situations may influence the selection of a different "n" factor. While in many applications the measured "n" factor is normally used, the final selection of the "n" is the owner or engineer's choice based on their experience.

Table 3-1
Comparative Flow Rates for Corrugated Metal Pipe (CMP) lined with Snap-Tite®
Based on Manning's equation n=.00914 for Snap-Tite®, n=.024 for CMP, s=.001 ft/ft

CMP			Snap-Tite®				% of Flow Relined
Culvert Size ID (in)	Flow (gpm)	Flow (cfs)	Outside Dia. (in)	DR 32.5 Av. ID (in)	Flow (gpm)	Flow (cfs)	
12	274	0.6	10.75	10.05	448	1.0	164%
15	497	1.1	12.75	11.92	706	1.6	142%
18	808	1.8	14	13.09	906	2.0	112%
18	808	1.8	16	14.96	1294	2.9	160%
21	1218	2.7	16	14.96	1294	2.9	106%
21	1218	2.7	18	16.83	1771	3.9	145%
24	1739	3.9	18	16.83	1771	3.9	102%
24	1739	3.9	20	18.70	2346	5.2	135%
24	1739	3.9	22	20.56	3025	6.7	174%
27	2381	5.3	22	20.56	3025	6.7	127%
27	2381	5.3	24	22.43	3815	8.5	160%
30	3153	7.0	24	22.43	3815	8.5	121%
30	3153	7.0	28	26.17	5755	12.8	182%
36	5128	11.4	28	26.17	5755	12.8	112%
36	5128	11.4	30	28.04	6917	15.4	135%
36	5128	11.4	32	29.91	8216	18.3	160%
42	7735	17.2	34	31.78	9658	21.5	125%
42	7735	17.2	36	33.65	11248	25.1	145%
48	11043	24.6	36	33.65	11248	25.1	102%
48	11043	24.6	42	39.26	16967	37.8	154%
54	15118	33.7	42	39.26	16967	37.8	112%
54	15118	33.7	48	44.87	24224	54.0	160%
60	20023	44.6	48	44.87	24224	54.0	121%
60	20023	44.6	54	50.48	33163	73.9	166%
66	25817	57.5	54	50.48	33163	73.9	128%
72	32559	72.5	63	58.89	50024	111.5	154%
84	49114	109.4	63	58.89	50024	111.5	102%

Table 3-2
Comparative Flow Rates for Concrete Pipe lined with Snap-Tite®
Based on Manning's equation n=.00914 for Snap-Tite®, n=.015 for Concrete, s=.001 ft/ft

Concrete			Snap-Tite®				% of Flow Relined
Culvert Size ID (in)	Flow (gpm)	Flow (cfs)	Outside Dia. (in)	DR 32.5 Av. ID (in)	Flow (gpm)	Flow (cfs)	
12	438	1.0	10.75	10.05	448	1.0	102%
15	795	1.8	12.75	11.92	706	1.6	89%
18	1292	2.9	14	13.09	906	2.0	70%
18	1292	2.9	16	14.96	1294	2.9	100%
21	1949	4.3	16	14.96	1294	2.9	66%
21	1949	4.3	18	16.83	1771	3.9	91%
24	2783	6.2	18	16.83	1771	3.9	64%
24	2783	6.2	20	18.70	2346	5.2	84%
24	2783	6.2	22	20.56	3025	6.7	109%
27	3810	8.5	22	20.56	3025	6.7	79%
27	3810	8.5	24	22.43	3815	8.5	100%
30	5045	11.2	24	22.43	3815	8.5	76%
30	5045	11.2	28	26.17	5755	12.8	114%
36	8204	18.3	28	26.17	5755	12.8	70%
36	8204	18.3	30	28.04	6917	15.4	84%
36	8204	18.3	32	29.91	8216	18.3	100%
42	12376	27.6	32	29.91	8216	18.3	66%
42	12376	27.6	34	31.78	9658	21.5	78%
42	12376	27.6	36	33.65	11248	25.1	91%
48	17669	39.4	42	39.26	16967	37.8	96%
54	24190	53.9	42	39.26	16967	37.8	70%
54	24190	53.9	48	44.87	24224	54.0	100%
60	32037	71.4	48	44.87	24224	54.0	76%
60	32037	71.4	54	50.48	33163	73.9	104%
66	41307	92.0	54	50.48	33163	73.9	80%
66	41307	92.0	63	58.89	50024	111.5	121%
72	52095	116.1	63	58.89	50024	111.5	96%
84	78582	175.1	63	58.89	50024	111.5	64%

Table 3-3
Comparative Flow Rates for Concrete Box Culvert lined with Snap-Tite®
Based on Manning's equation n=.00914 for Snap-Tite®, s=.001ft/ft

Existing Concrete Box Size	Manning's ``n´´ Factor	Snap-Tite® Liner Size	Box full-flow cfs	Snap-Tite® Flow cfs	% of Flow
3 ft. x 3 ft.	0.012	36"	29	25	86%
	0.015	36"	23	25	108%
4 ft. x 4 ft.	0.012	48"	63	54	86%
	0.015	48"	50	54	107%
5 ft. x 5 ft.	0.012	54"	114	74	65%
	0.015	54"	91	74	81%
6 ft. x 6 ft.	0.012	63"	186	111	60%
	0.015	63"	149	111	75%

3-4 Velocity

Velocity is the speed at which water flows through a culvert. When the velocity exceeds 3 feet per second (fps), sediment is normally entrained in the flow, and the culvert is considered self cleaning. If the velocity is less than 3 fps, sediment will usually buildup in the culvert. In evaluating sediment potential, factors such as particle size, specific gravity, cohesiveness, flow velocity and roughness of the pipe must also be considered.

Once the flow rate is determined using Manning's equation, then the velocity, V (ft/sec), can be approximated by using the equation below:

V = Q/A

Where:
Q= flow, cu ft per sec
A = area, ft sq

As the velocity increases, sediment is no longer a problem in most situations. It is considered high when velocities are over 12 feet per second. Solid-wall HDPE pipe has been used in slurry and dredging applications at velocities approaching 18 to 20 fps, with excellent wear resistance compared to most other materials. Short-term exposure to high velocity may cause long-term damage. As large rocks and debris strike the Snap-Tite® liner, damage can occur. Damage and wear is more likely at higher velocities.

When the velocity is known to be high, streambed scour and bank erosion may occur at the discharge of the outlet pipe. The high velocity and flow condition can erode a channel. An apron of formed concrete or riprap under the discharge is commonly used to prevent erosion and scour at the discharge.

High velocity in a liner can cause separation on the liner joints when the liner is not grouted in place. Grouting of the liner into the host culvert will solve separation concerns from velocity.

It should be noted that one of the anomalies associated with flow in circular pipes is that a partially full pipe will have higher discharge flow rates than a full pipe can carry, due to the increased friction along the wetted perimeter (Figure 3-1). Flow rates above 80% full will be higher than a pipe with full pipe flow, with a peak at 93%. Velocities above 50% will be higher than full pipe velocities with a peak at approximately 80% full mark.

Figure 3-1

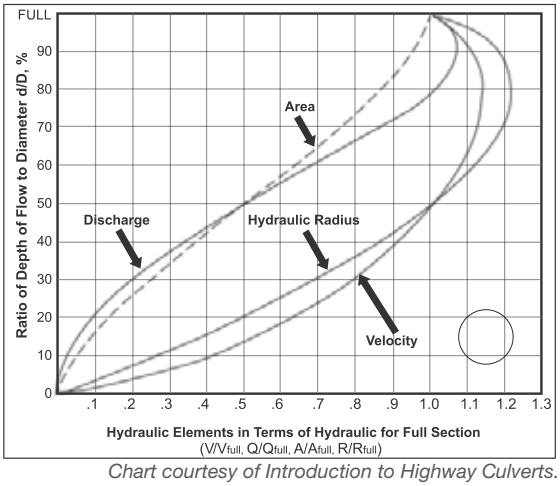

Chart courtesy of Introduction to Highway Culverts.

3-5 Pressure Considerations

Snap-Tite® is made using low-pressure HDPE pipe. The Snap-Tite® joint is designed for use in gravity flow applications and to meet the requirements for ASTM D3212. Pressure from headwater or tailwater conditions should not harm the liner or the joint. Snap-Tite® is not designed for long-term pressure applications.

3-6 Types of Flow Control

Once a pipe exceeds the point of gravity full-flow, culvert operation is ruled at all times by one of two conditions: inlet control or outlet control. When lining culverts, both inlet and outlet control must be considered. The hydraulic capacity of a culvert depends upon a combination of factors that influence each type of control, identified in Table 3-4. The slope of a culvert, that is barrel slope, is the primary factor influencing whether or not a culvert will be in inlet or outlet control.

Table 3-4
Factors Influencing Culvert Design

Factor	Inlet Control	Outlet Control
Headwater	X	X
Inlet Configuration	X	X
Area	X	X
Shape	X	X
Barrel Slope	X	X
Barrel Roughness	-	X
Barrel Length	-	X
Tallwater	-	X

Note: For inlet control, the area and shape factors relate to the inlet area and shape. For outlet control they relate to the barrel area and shape.

Figure 3-2
Outlet Control

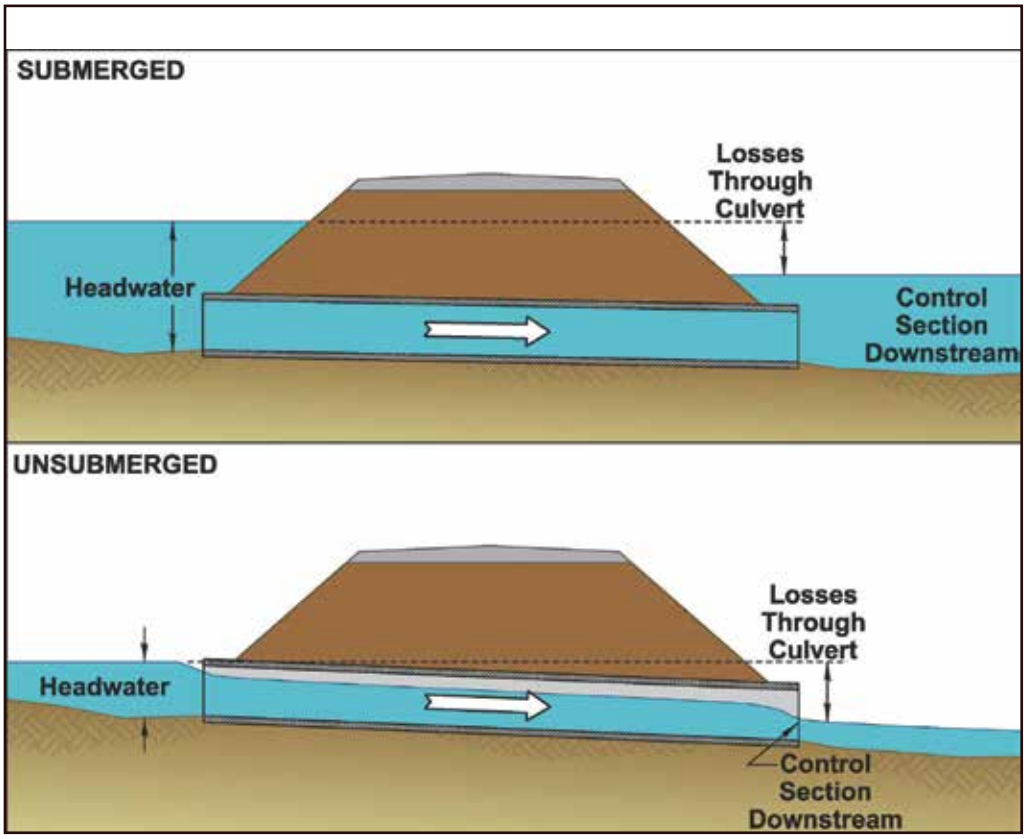

Figure from U. S. Department of Transportation Federal Highway Administration Hydraulic Design of Highway Culverts

Outlet control occurs when flow through the culvert barrel or tailwater can not accept as high a flow as the inlet opening will accept. Tailwater is the water surface elevation on the downstream side of a culvert as measured from the invert at the culvert exit. High tailwater alone can make a culvert operate under inlet control, but long culverts with rough interiors or slightly sloping culverts are other factors with outlet control. Figure 3-2 depicts a couple of instances when outlet control governs flow.

Most culverts relined with Snap-Tite® operate in inlet control since high tailwater water conditions are not as common in well-designed drainage systems. Additionally, the smooth barrel will typically allow more water than the inlet, so the inlet becomes the controlling section of the system.

Inlet control means the discharge capacity of a culvert is controlled at the culvert entrance by depth of headwater, inlet factors like entrance type, barrel/inlet area and inlet shape, and, in rare cases, barrel slope. Inlet shape is typically the same as culvert barrel except when enlarged with tapered inlets and flow enhancement devices at the barrel entrance. In inlet control, the roughness, length of culvert or outlet conditions (including tailwater depth) are not factors in determining culvert capacity.

The entrance type is a major factor for inlet control performance. Commonly found entrance types include square edge with headwall, end mitered to the slope, projecting barrel, and beveled entrance. Relined culvert inlets are likely to also utilize wingwalls (see chapter 6) placed at an angle from the culvert barrel. While providing structural stability for the culvert/bulkhead assembly and the surrounding backfill, wingwalls work well to funnel flow into the culvert opening.

Inlet control performance is defined by three regions of flow: unsubmerged, transition and submerged. For low headwater conditions, as shown in Figure 3-3A and Figure 3-3C, the culvert entrance is unsubmerged and the culvert operates as a weir. A weir is a flow control cross-section where the flow rate and the depth of water are related to one another. At much higher flows, as shown in Figure 3-3B and Figure 3-3D, the entrance is submerged and the culvert operates as an orifice. Flow rate through an orifice increases as headwater depth rises above the orifice.

Figure 3-3
Intlet Control

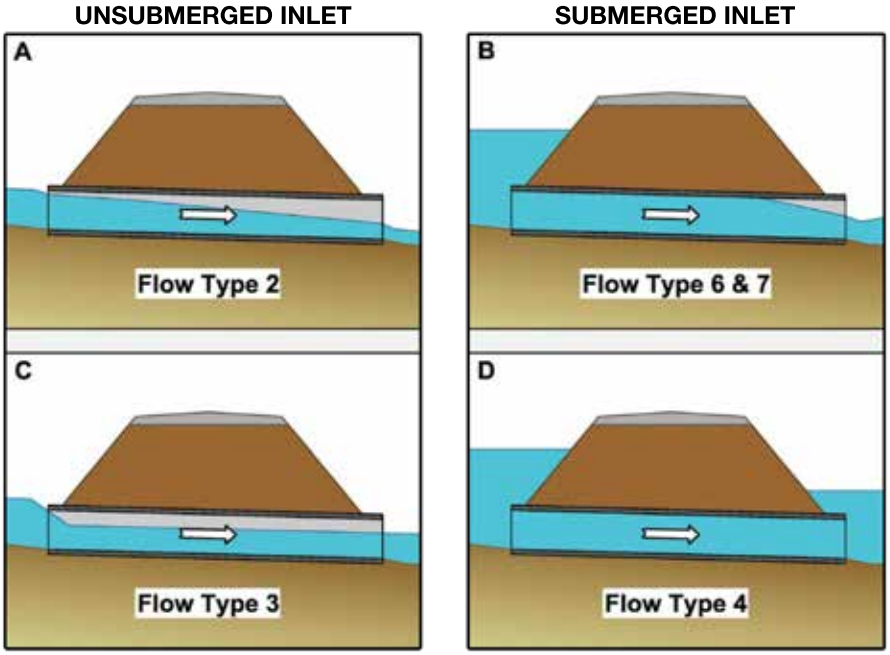

Figure from U. S. Department of Transportation Federal Highway Administration Hydraulic Design of Highway Culverts

Figure 3-4

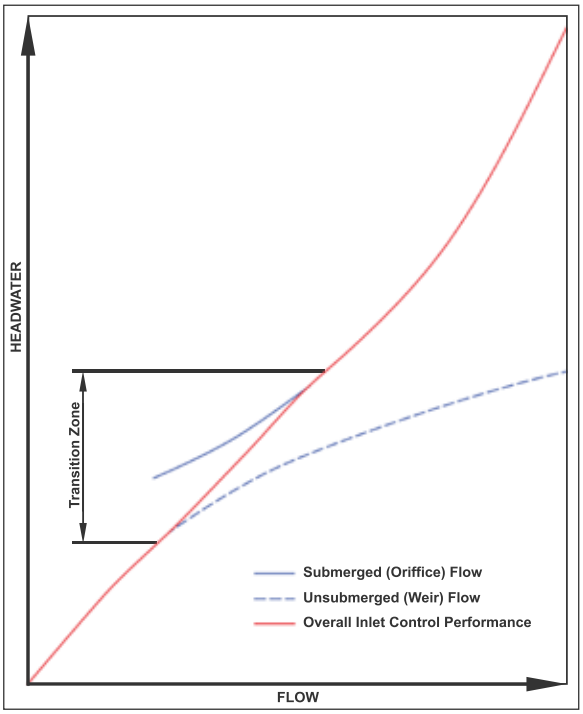

Figure from U. S. Department of Transportation Federal Highway Administration Hydraulic Design of Highway Culverts

There exists a less distinct flow transition zone between the low headwater (weir control) and the high headwater (orifice control) flow conditions. By plotting the unsubmerged and submerged flow equations and connecting them with a line tangent to both curves, as shown in Figure 3-4, the flow characteristics of the transition can be estimated.

Inlet control equations are presented in HDS-5 (2012) that describes unsubmerged and submerged inlet control. Section A.2.1 presents two forms for the unsubmerged case. While both expressions provide acceptable results, Equation A.1 (also known as Form 1) is theoretically more accurate, while Equation A.2 (known as Form 2) is easier to apply. It should be noted that inlet control constants K and M may vary depending which equation is used (HDS 5 Table A.1 has listings for constants for concrete and corrugated metals of differing shapes and ends).

When the culvert entrance is submerged, a different equation must be applied to find the headwater depth under inlet control (Section A.2.2 has Equation A.3). In either case of inlet control, model studies are typically used to develop the inlet control coefficients.

Equation A.1:

$$\frac{HW_i}{D} = \frac{H_c}{D} + K\left[\frac{K_u Q}{AD^{0.5}}\right]^M + K_s S$$

Equation A.2:

$$\frac{HW_i}{D} = K\left[\frac{K_u Q}{AD^{0.5}}\right]^M$$

Equation A.3:

$$\frac{HW_i}{D} = c\left[\frac{K_u Q}{AD^{0.5}}\right]^2 + Y + K_s S$$

Where:

HW_i = headwater depth at the culvert entrance (feet)
H_c = specific head at critical depth (feet)
Q = flow rate through the culvert (cubic feet/ second (ft^3/s))
A = full cross sectional area of the culvert (square feet)
D = culvert inside height or diameter (feet)

S = culvert barrel slope (feet/foot)
K, M, c, Y = inlet control constants
K_u = Unit conversion 1.0 (1.811 SI)
K_s = Slope correction, -0.5 (mitered inlets +0.7)

3-7 Entrance Loss

Entrance loss coefficient (k_e) is commonly used in outlet control design. The size and shape of the interface between the culvert material and fluid greatly influence the entrance loss coefficient. A square cut abrupt culvert end will result in a higher loss coefficient than a culvert with a beveled or rounded edge. Table 3-5 lists some typical values for concrete pipe, a more extensive list can be found in Table C.2 of HDS 5.

When relining with Snap-Tite®, the entrance loss coefficient will typically match that of the existing host pipe or headwall (with or without wingwalls) configuration used at the transition. For example, a liner that has been mitered after grouting to conform to fill slope would still be expected to have a .7 value. A liner that projects from fill or the host pipe would have a similar .5 value. A relined culvert that has a headwall with wingwalls to direct flows

Table 3-5
Entrance Loss Coefficients

Type of Structure and Design End Treatment	k_e
Pipe, Concrete	
Projecting from fill, square cut end	0.5
Square cut with headwall	0.5
Mitered to conform to fill slope	0.7
Beveled edges, 33.7 degree	0.2
Socket end of pipe	0.2

Data from U. S. Department of Transportation Federal Highway Administration Hydraulic Charts for the selection of Highway Culverts

would be expected to closely match values listed in established tables for the angle of the wingwall. Testing was conducted at Utah State on a configuration representing a plain headwall with HDPE end that is not projecting and a .50 to .55 value was determined, which matches other pipe materials with square edge configurations that have no wingwalls.

3-7 Hydraulics with Hydro-Bell

The Hydro-Bell inlet enhancement uses newer materials to capitalize on the effects of culvert fluid dynamics. Through this design, it is now possible to improve the hydraulic efficiency by increasing the capacity of flow at the inlet of a culvert. It can be used alone, or in addition to wingwalls, to help channel flow more efficiently at the headwall to liner pipe transition.

The Hydro-Bell design consists of rounding the inlet with a leading radius, which transitions to a diametrical recess in the interior of the structure. Figure 3-5 shows the general shape of the Hydro-Bell.

As fluids flow into the pipe, a flow boundary layer can separate from the pipe wall creating turbulent flow and reducing the cross sectional area of the barrel for efficient fluid flow. By creating a smooth transition into the inlet device and accommodating the naturally occurring turbulent flow, the cross sectional area available for flow can be maximized.

Laboratory studies were conducted at Utah State University's Water Research Laboratory. Different versions of the Hydro-Bell shapes were tested to establish the optimal peak flow. Both inlet and outlet control events were simulated and compared to a control plain-end headwall shape. An entrance loss coefficient, k_e, for the Hydro-Bell typically ranged from .2 to .235 across a range of testing condition.

Figure 3-5

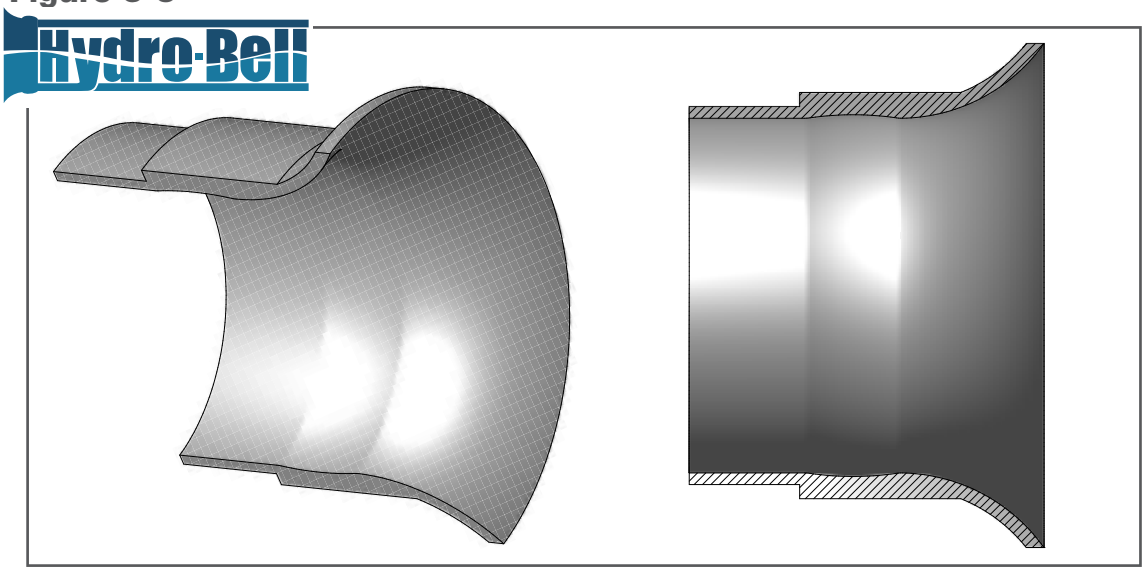

Table 3-6
Inlet Control Constants

Inlet End	K	M	c	Y
Hydro-Bell	0.535	0.509	0.019	0.863
Plain-End HDPE with Flat Headwall	0.591	0.518	0.037	0.780

Inlet control constants were also obtained that hydraulically characterizes the Hydro-Bell inlet device. Unsubmerged Form 2 Equation (Eq. A.2 as referenced earlier) was used to develop the constants. The constants are considered valid for Hw/D<~1.2 for Unsubmerged Form 2 and Hw/D>~1.2 for the submerged equation. Table 3-6 lists the inlet control constants for both the Hydro-Bell and the plain-end headwall conditions developed under the laboratory testing.

Due to the geometry of inserting a smaller liner into a failing host pipe, a reduction of inlet area and barrel shape are two essential variables that cannot be controlled. Consequently, the addition of the Hydro-Bell at the inlet of a relined culvert does allow increased flow as compared to a plain-end headwall operating under inlet control conditions. As head pressure increases, the flow rate improvements ranged from 15%-20% in low-head conditions to 35%-40% in high head conditions. Ultimately, a Hydro-Bell improved inlet will result in lower headwater elevations as compared to the same relined pipe with just a headwall/ wingwall combination.

Chapter 4
Oval Pipe

Culverts installed 40-50 years ago are failing at an alarming rate and are in desperate need of rehabilitation.

Finally, there's a no-dig solution to culvert lining and culvert rehab in the form of Snap-Tite®. Utilizing the Snap-Tite® Culvert Lining System for culvert rehabilitation and drainage solutions is an intelligent, cost-effective solution. Snap-Tite® rehabilitates a failing culvert lining system without the need to remove the existing deteriorated pipe.

Since one-third of existing culverts are arched, Snap-Tite® again has come up with a solution: oval pipe. It has the same benefits as smooth-wall HDPE Snap-Tite®, yet made for a better fit into an existing arched culvert.

The Snap-Tite® Culvert Lining System actually outperforms both the round and oval concrete and corrugated metal pipes it rehabilitates. Lightweight, flexible, durable HDPE has an indefinite service life and the Snap-Tite® culvert lining joining system assures a water-tight seal at all joints.

Table 4-1
Flow in Lined CMP
Flow is based on slope of .1%. HDPE n= .00914 / CMP n= .024

CMP Size (Inches)	Equivalent Snap-Tite® Round OD (Inches)	Outside Liner Diameter (Inches)		Inside Liner Diameter (Inches)		Flow Q (cfs)	Snap-Tite® % of Flow
		Minor	Major	Minor	Major		
20 in. 28 in.	20	16.5	23	15.1	21.7	4.7	128%
24 in. 35 in.	24	18	29	16.4	27.1	7.0	111%
29 in. 42 in.	30	22.5	36	20.3	34	12.5	121%
33 in. 49 in.	36	30	41	27.7	38.7	23.0	153%
38 in. 57 in.	42	34	48.5	31.3	45.9	33.8	152%
43 in. 64 in.	48	39	55.5	35.9	52.3	48.3	158%
47 in. 71 in.	54	43	63	39.5	59.5	65.0	165%
52 in. 77 in.	54	47	60	43.5	59.6	74.7	148%
57 in. 83 in.	63	52	72.5	47.9	68.1	101.2	160%
63 in. 87 in.	63	58	67.5	53.9	63.5	109.1	141%

Oval Snap-Tite Pipe® with struts inside, before installation.

Snap-Tite® pipe coming through a deteriorating culvert during installation (struts will be removed once completed).

A culvert, rehabilitated with Snap-Tite® oval pipe.

Table 4-2
Flow in Lined RCP
Flow is based on slope of .1%. HDPE n= .00914 / concrete n= .015

RPC Size (Inches)	Equivalent Snap-Tite® Round OD (Inches)	Outside Liner Diameter (Inches)		Inside Liner Diameter (Inches)		Flow Q (cfs)	Snap-Tite® % of Flow
		Minor	Major	Minor	Major		
19 in. 30 in.	22	17	26	15.6	24.6	5.8	97%
24 in. 38 in.	28	21	33.5	19.2	33.6	11.4	102%
29 in. 45 in.	32	26	37	23.9	34.9	16.4	91%
34 in. 53 in.	40	31	46	28.4	43.6	27.6	100%
38 in. 60 in.	42	34	48.5	31.3	45.9	33.8	89%
43 in. 68 in.	48	39	55.5	35.9	52.3	48.3	92%
48 in. 76 in.	54	43	63	39.5	59.5	65.0	92%
53 in. 83 in.	63	48	75	55.9	70.2	95.7	105%
58 in. 91 in.	63	52	72.5	47.9	68.1	101.2	87%
63 in. 98 in.	63	58	67.5	53.9	63.5	109.1	76%

Chapter 5
Ease of Installation

People

Highway departments can use their own crews to install Snap-Tite®- no special training is necessary. Using minimal equipment, a team of four can easily rehabilitate a culvert. Purchase the Snap-Tite® Culvert Lining Systems today, keep it in your yard until you have some down time and install it that day. What would be lost payroll time becomes a money-saving project.

Product

Snap-Tite® Culvert liner is a tough, flexible liner made from solid-wall HDPE pipe. The ends are machined to make a mechanical connection which provides tensile and compression strength.

Equipment

Snap-Tite® is so easy to install that most jobs can be completed with a backhoe, shovels, two come-a-longs, and chains. If a culvert requires cleaning, a water truck or jet cleaner may be needed.

Chains and come-a-longs are part of the equipment needed to install Snap-Tite® Culvert Liner. Standard chain come-a-longs are available with load ratings of 1,000 to 5,000 lbs. of force. Verify the amount of force that the come-a-longs are capable of applying before using them. For safety reasons, the chains normally are able to handle twice the load applied by each come-a-long.

Chains are sold based on working load. The working load is the normal rating for typical lifting applications. The strength at failure is usually four times the working load. When a chain is wrapped around a Snap-Tite® liner and tightened with a chain binder, it is under tensile loading.

After a come-a-long is attached to a chain link, the link is subject to cross loading. A cross load occurs because the chain must wrap around the pipe to transfer the forces. As the cross load is increased, the angle of the chain around the liner changes. See drawing 1.

Chain manufacturers reduce the working load by 25% for cross loading. A chain with a standard rating of 6,000 lbs. is only rated for 4,500 lbs. in this application. If you have determined that you need 6,000 lbs. working load on the chain for a Snap-Tite® Installation, then an 8,000 lbs. working load rated chain is needed.

Full load is applied when the male and female joints come together straight on and part of the flat surface on both sides “catches.” The best joining procedure is to watch the joining process and make corrections based on observations. When pipe movement requires more force than expected, look for a reason. If the joints do “catch,” rotation of the two liner sections or alignment with a pry bar may solve the problem.

Drawing 1: Chain Wrap Position

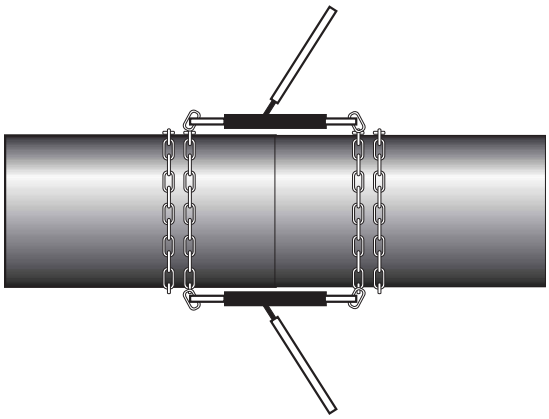

Position of chain before load – Top View

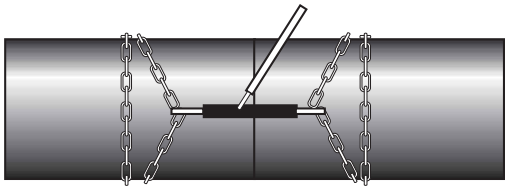

Chain under load – Side View

If the male end is at a slight angle to the female and partially inserted, lower force is required to make the joints mate. Apply force from one come-a-long until liner bends slightly. Apply force slowly, this allows the female joint to expand. Be cautious when tightening a chain or cable!

Joining forces changes with temperature, type of lubrication, male-female joint alignment, presence of debris, slope and time. Forces are estimated for slow application of force with flat slope and lubricated joint. A slow application of force allows materials to stretch. Fast joining requires more force and energy because material does not immediately increase in size. More force will be required below 73 degrees Fahrenheit. Forces are estimated only!

Table 5-1
Estimated Force to Join Snap-Tite® Liner

Liner Size OD (Inches)	Weight per foot (lbs.)	Weight of 24 feet (lbs.)	Estimated Joining Force (lbs.)	Total Force (lbs.)	Min. Load Rating for Each Come-along
10.75	4.75	114	500	614	1,000 lb.
12.75	6.67	160	1,000	1,160	1,000 lb.
14	8.05	193	1,000	1,193	1,000 lb.
16	10.50	252	1,000	1,252	1,000 lb.
18	13.30	319	1,000	1,319	1,000 lb.
20	20.34	488	1,000	1,419	1,000 lb.
22	19.86	477	1,000	1,477	1,000 lb.
24	23.62	566	1,500	2,066	2,000 lb.
28	32.19	773	1,500	2,273	2,000 lb.
30	36.93	886	1,500	2,386	2,000 lb.
32	42.04	1,009	2,000	3,009	3,000 lb.
36	53.20	1,255	2,000	3,255	3,000 lb.
39.37	63.69	1,529	3,000	4,529	3,000 lb.
42	72.37	1,737	3,000	4,737	3,000 lb.
48	94.96	2,279	3,000	5,279	3,000 lb.
54	119.7	2,873	3,000	5,873	3,000 lb.
63	162.98	3,912	4,000	7,912	4,000 lb.

Installation Steps

Step 1 – Select and prepare the existing culvert. Inspect the culvert to ensure the liner can be inserted without obstruction. Flush and/or clean the existing culvert.

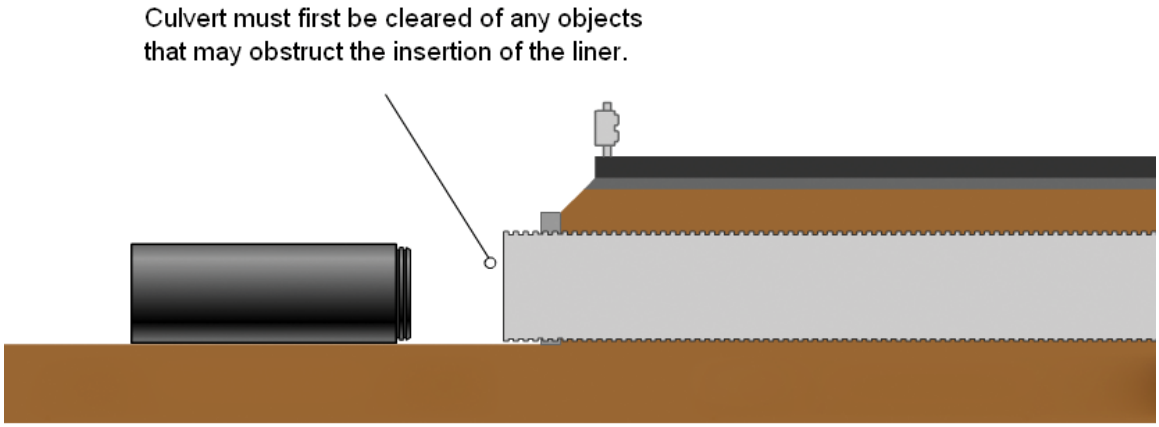

Pieces of wood are used to maintain grade and alignment

Step 2 – Insert one end of Snap-Tite® Culvert Liner into existing culvert. This can be done using a variety of techniques. Leave about five feet of liner exposed. Prior to installation of first section, it may be necessary to create a "nose cone" by cutting the ends of the pipe.

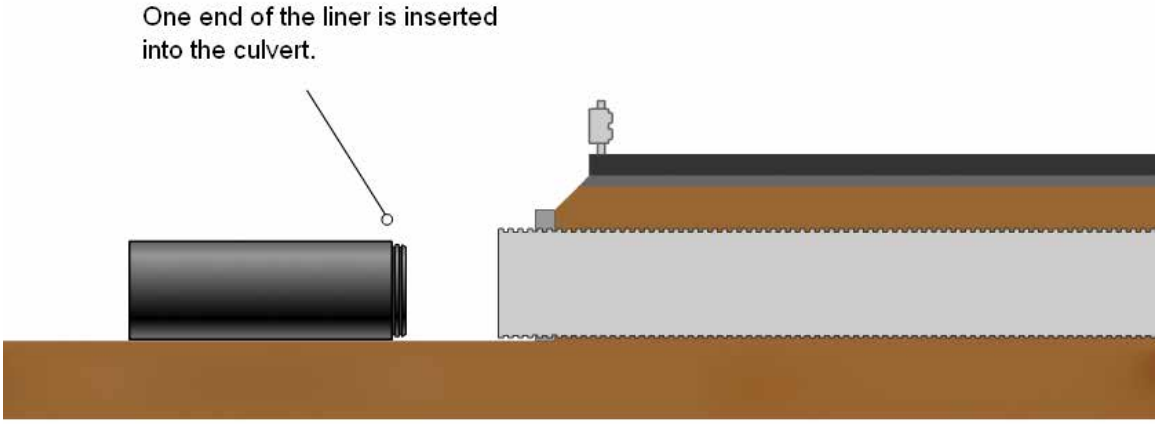

Typical Nose Cone Construction

Make 8 Dove Tails. Drill hole –1/2 about 1" from point of Dove Tail.

Draw pieces toward each other by connecting wire to opposite holes and twisting the wire to tighten.

All dimensions can be varied to suit specific conditions.

Step 3 – Position the next section of Snap-Tite® Culvert Liner with proper alignment.
Place the opposing end of a second section against the exposed end of the first section. The two sections must be in alignment and have the same slope.

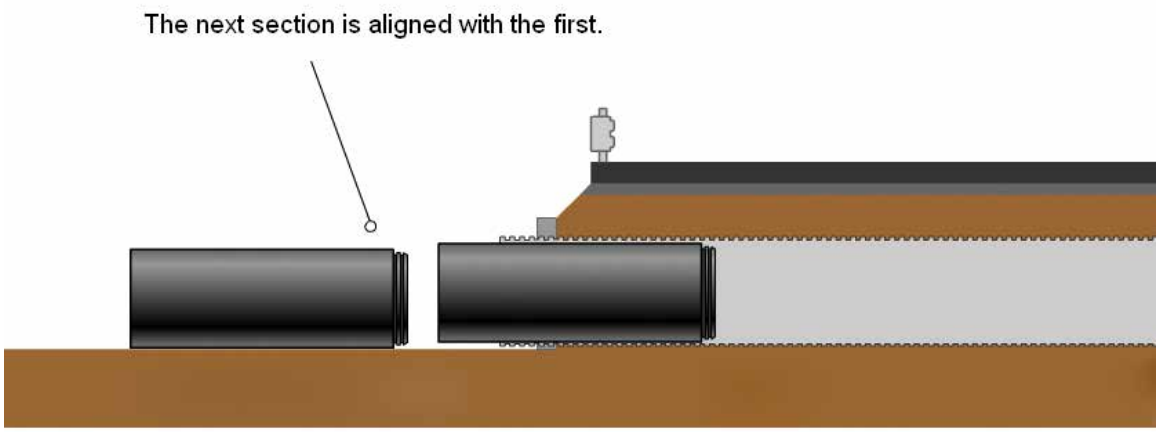

Step 4 – Lubricate the male side of Snap-Tite® joint. A gasket is normally supplied with Snap-Tite® pipe. It is installed on the male end to help make a watertight seal, and should be placed in the first groove. Make sure that one end of the gasket is touching the side of the groove that is closest to the end. Check the alignment of the gasket around the liner. Apply lubricant to the entire circumference of the liner. The lubricant must be applied evenly to reduce the chance of a torn or rolled gasket.

Lubricants

Most standard pipe and gasket lubricants can be used with Snap-Tite® Culvert Liner and gaskets. Aromatic hydrocarbons (like gasoline) and most petroleum-based lubricants must be avoided. Vegetable oil and mineral oil are acceptable in most formulations.

In environmentally challenging applications, spray-on lubricants like SLIKSTYX™ may be the best choice. SLIKSTYX™ can be applied at low concentrations.

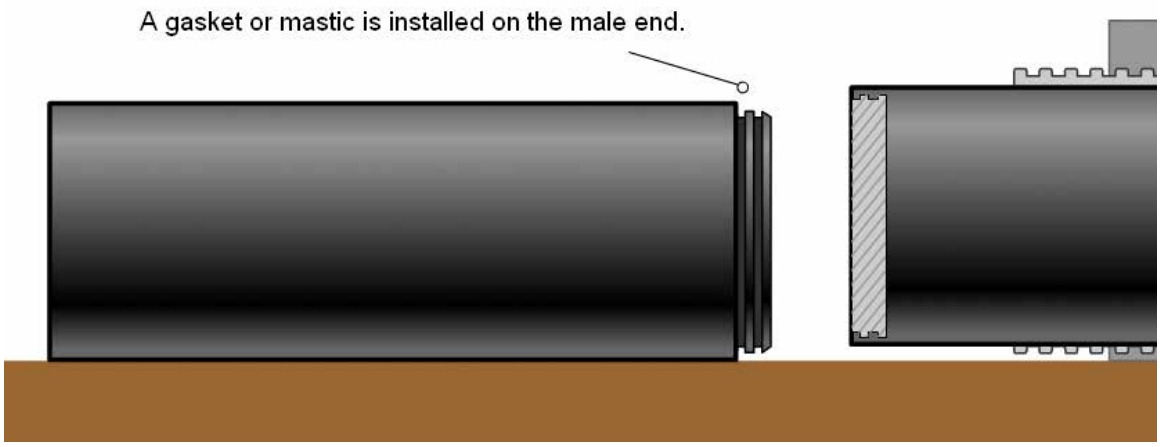

Option: *Mastic can be applied to second large groove to reduce chance of leakage when joints are deflected. Carefully apply mastic to large groove. Too much or too little mastic can increase chance of leakage. (See Drawing 2: Male End of Snap-Tite® and Completed Snap-Tite Joint)*

Step 5 – Attach the chains and couplings. Double-wrap the chains approximately four feet from the coupling end and tighten with binders. Attach one come-a-long on each side of the couplings, 180 degrees apart.

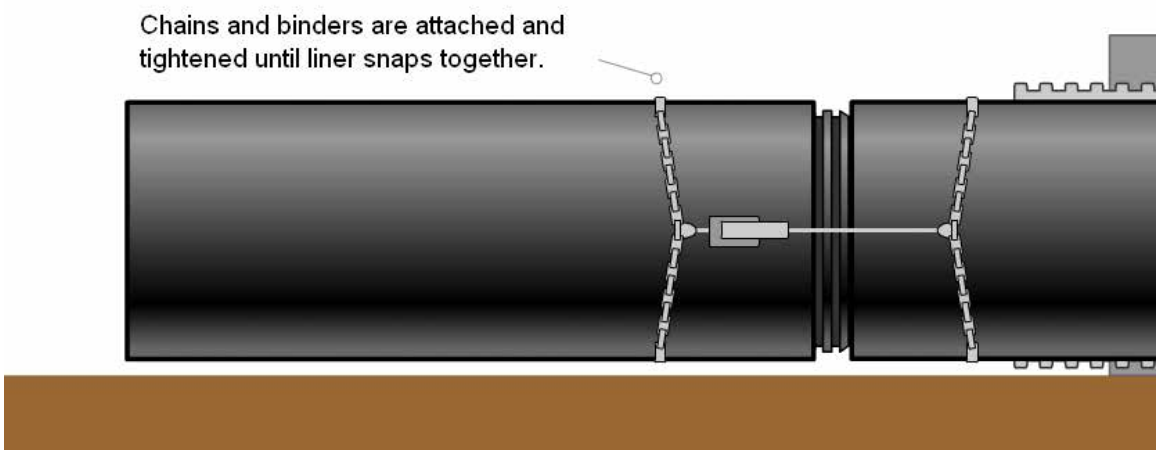

Step 6 – Snap liner together. Align the ends of the male bevel inside the female bevel. Use a pry bar or move the come-a-longs to different positions on liner if pipe is out of round to improve alignment. Be sure male end has been properly lubricated. Pull the couplings together slowly, forcing the female end to expand and allow the male end to move into the female end. Apply force slowly and make observations. Apply force to one side until liner slightly deflects, then apply force on other side. Look for the female side to increase in OD as force is applied.

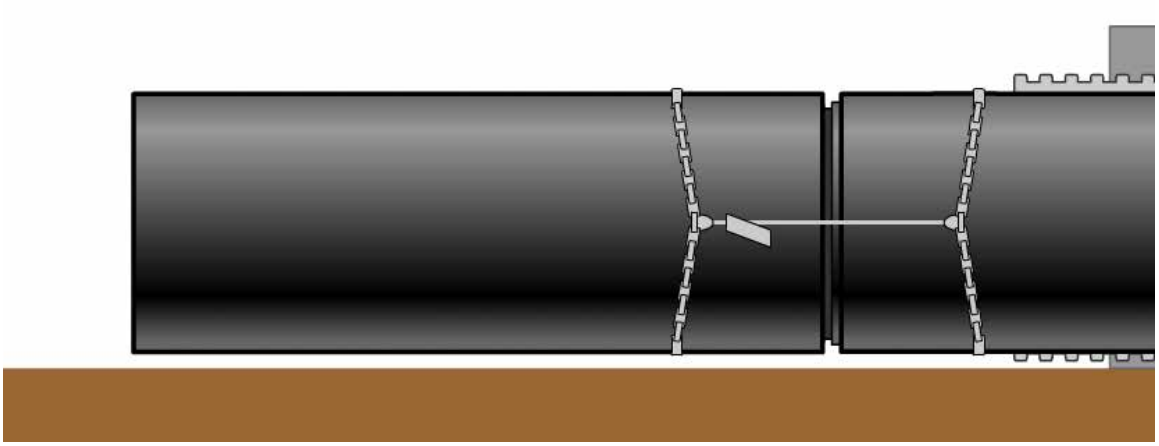

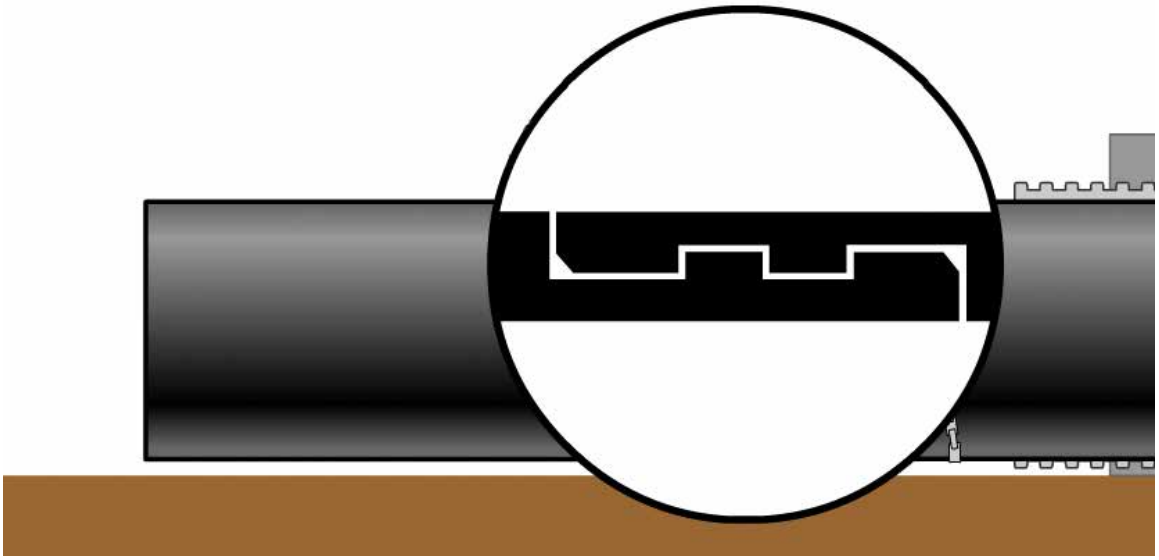

Caution! *If chain or come-a-long appears to be overstressed, stop operation! Quickly move away from the chain! When ends and grooves are aligned, the couplings will "snap" and lock together. Allow time for this to occur. If operation is stopped, check alignment. Often poor alignment or a stone or dirt in the end causes the need for additional pressure. Rotation of the liner will change alignment. Clean out the joint if needed.*

Step 7 – Push joined liners into culvert and repeat until completely lined. Remove chains, push joined liners into culvert and repeat steps 1-6. Each new piece of pipe is snapped onto the proceeding pipe and pushed into the culvert, leaving enough pipe protruding from the culvert to join with the next length of liner.

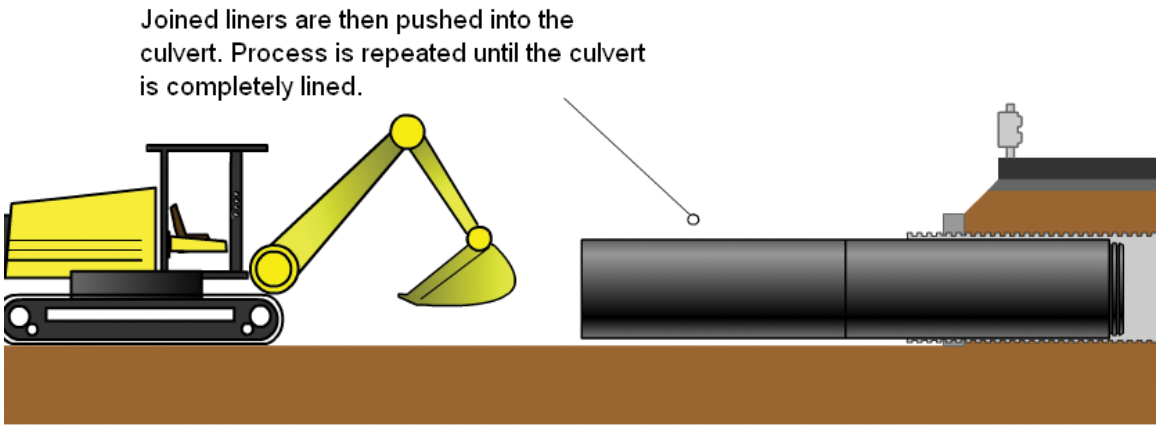

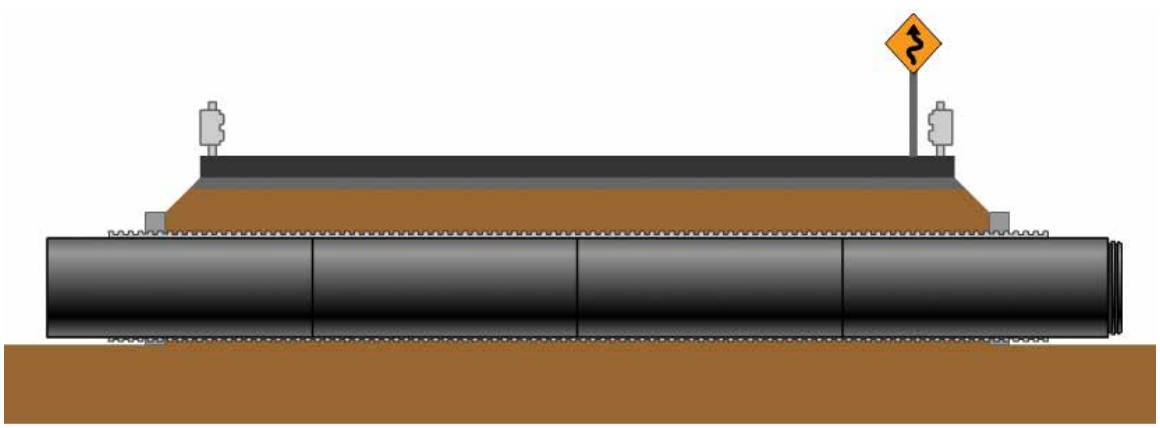

Step 8 – Seal the culvert ends. Make an end seal for the annular space a distance of one to two feet at each end using an appropriate grout. A relatively dry cement grout is used in most situations. Chemical grout, oakum, and other seals are used depending upon the situation. See Chapter 6, Annular Space Grouting.

Ends are sealed. Pipes are inserted to drain any water, to vent air and allow for grout injection. The annular space is then grouted. Grouting is similar to backfilling, as it provides support for the road and liner.

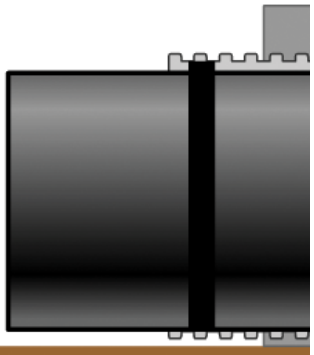

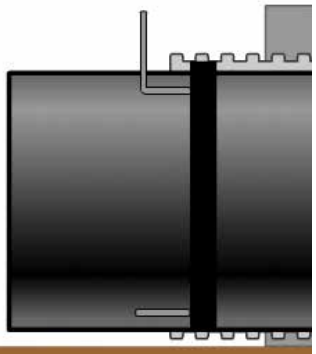

Step 9 – Grout the annular space. It is recommended that the annular space between the existing culvert and the liner be grouted. This will help fill the voids created by previous washouts, provide additional structural support, and prevent point loading.

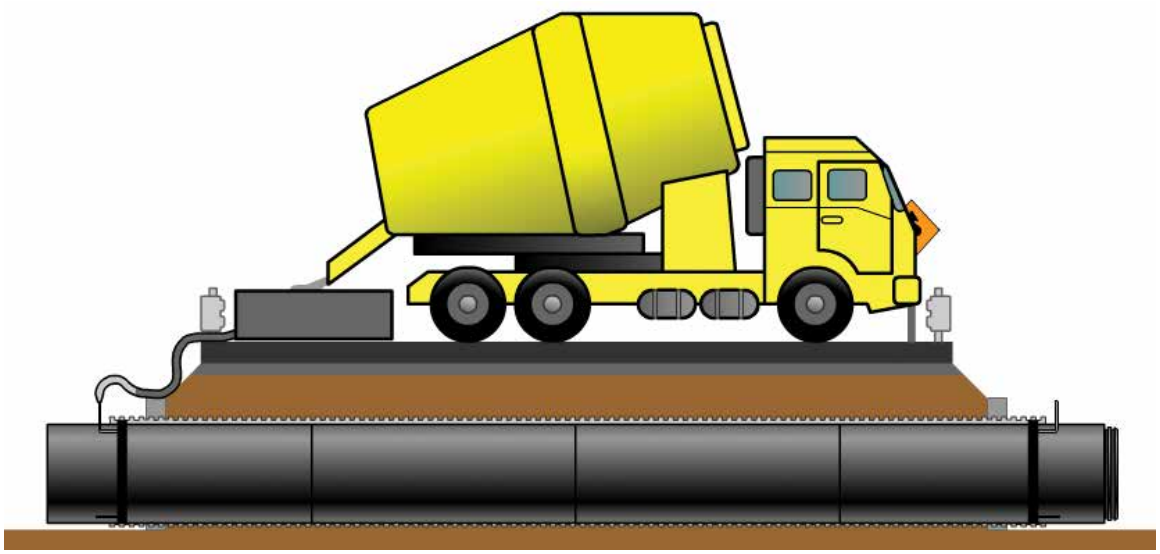

See Chapter 7, Annular Space Grouting.
Additional information is available by calling your Snap-Tite® representative.

Step 10 – Angling the Inlet Structure. After grouting the annular space, complete work on inlet and outlet structure. Angling the inlet structure can improve flow into lined culvert.

See Chapter 6, End Seals, Wing Walls and Bulkheads or Hydro-Bell in Chapter 3, Hydraulics.

Chapter 6

End Seals, Wing Walls and Bulkheads

End Seals, Wing Walls and Bulkheads

When the Snap-Tite® Liner is in place, after it has been pulled or pushed inside the culvert pipe, the annular space between the culvert and the liner must be sealed in order to stop leakage from the old pipe. When the Snap-Tite® Liner is installed and the ends are sealed, the flow of water will stop; soil and backfill will remain in place.

The above picture shows sliplining through a wing wall. An end seal with fill pipes is under construction.

End seals can be made in many different ways. The most common way to make end seals is to pack relative dry cement mix around the ends of the liner between the host culvert and the Snap-Tite® liner. Another method is to build a form and pour concrete in the form. If this method is used, it is important that concrete mix extend between the host culvert and the liner for 12 to 18 inches. This length of contact is needed for a good seal to form in this area.

Dry mix must be packed into the annular space between the host culvert and the Snap-Title® Liner to get a good seal and structural soundness. The mix shall be packed 12 to 24 inches into the annular space. The size of the liner and pressure in the annular space determine the exact depth.

When there is erosion at the ends of the existing culvert, headwalls are cast at the end of the culvert pipe and around the liner. When headwalls are used, the wall must be designed to handle soil loads, hydrostatic pressure, expansion and contraction and other forces from the roadbead. The design must include sealing of the liner to the headwall plus stopping flow from any French drain effect around the old culvert. For sections of liner 80 or more feet in length, it is important to extend the liner through the wall at least six inches on each end to allow for possible contraction.

The final step in finishing an end seal or headwall is to remove the fill pipes and seal over these areas.

Cast in place headwall

Chapter 7
Annular Space Grouting

Purpose

When rehabilitating culverts, the primary goals of annular space grouting are to stop the leakage of water, stop movement of road backfill materials, secure the liner in place and reinforce the old culvert. Grouting the annular space is a key process in reaching these goals. Proper grouting of the annular space ensures a long life for the pipe system, and the road above. This can be critical to provide a total-systems approach for culvert rehabilitation.

When the existing culvert has deteriorated to such an extent that bedding material has infiltrated into the culvert, resulting in voids beneath the road base, grout can be used to help fill these voids. This effectively stabilizes the surrounding soils and eliminates the potential for settlement or collapse of the roadway.

The grout around the liner provides extra support for the liner. This support increases the collapse strength of the liner. With no grout, if the host culverts begin to collapse, there is a danger of point loads, localized deflection, and possible impingement occurring on the Snap-Tite® liner. The grout supports the old culvert and helps to evenly distribute backfill and vehicle loads. As Chapter 8 discusses in greater detail, the grout becomes the primary structural component of a rehabilitated pipe system, and therefore the liner is not required to be a significant portion of the structural system. The primary role of the liner is to provide a smooth hydraulic surface, often with a pipe that has improved flow characteristics when compared to the original host pipe.

Need for Grout

Not every sliplined culvert requires grouting. If there is a very small annular space resulting from the sliplining, and the host pipe is structurally sound, grouting of the annular space may not provide enough benefits to justify the cost and effort required. Additionally, injecting grout into a small annular space may require pressure injection which could cause joint leakage or damage to the Snap-Tite® liner.

However, if the host pipe has failed or is in the process of failing, often evidenced by corrosion of a metal pipe or joint separation of a metal or concrete culvert (box structure or pipe), then grouting a sliplined culvert is recommended.

Types of Grout

Grout has traditionally been defined as “a thin, coarse mortar used for filling masonry joints.” In recent years the definition of grout has been expanded to cover a wide range of concrete and organic compounds used to fill masonry joints or space in or around pipes or liners. In Snap-Tite® culvert lining applications, both non-cellular and cellular grouts can be used to fill the annular space in a rehabilitated culvert system. But cellular grouts with lower densities are normally preferred since they limit hydrostatic loads on the liner when being placed.

Non-cellular grouts are the traditional Portland cement formulations, typically referred to as flowable fill. These products are well known and are used for many applications, including grouting liners in place. The Department of Transportation for most states has some type of specification established for flowable fill grout.

Flowable Fill Grout

This is comprised of a mixture of cement, sand, and water, sometimes with chemical admixtures put in to affect certain properties of the grout mix. A portion of the cement component can be replaced with fly ash. Fly ash is a cementitous material, usually at a lower cost than cement, which can improve certain properties of the resulting grout mix. Fly ash may not be available in all locations.

Flowable fills are sometimes used to fill the annular space or as backfill around pipe. The unit weight, or density, of a flowable fill grout mix typically ranges from 130 to 135 pounds per cubic foot (pcf). Project specifications may call for a 3-sack, 4-sack, or 5-sack flowable fill, referring to the amount of cement added to each cubic yard of the grout mix. One sack of cement weighs 94 pounds. Thus a 3-sack mix will have 282 pounds of cement mixed into each cubic yard batch; while a 5-sack mix will include 470 pounds of cement per cubic yard.

The extent to which a flowable fill grout can travel within the annular space is limited and based on viscosity. An annular space within a culvert that is longer than 40 – 50 feet may not be completely filled with such a grout mix. In such applications, by lowering the density, or unit weight, of the grout mix, the viscosity of the grout will also decrease and flowability of the mix will typically increase.

Reduced Density Flowable Fill

Certain chemical admixtures are available commercially to reduce the density of a flowable fill grout mix. The grout unit weight may be lowered to a value in the vicinity of 100 pcf, depending on the type of sand and cement used and the percentage of the various components in the mix design. These in plant or on site "bag mixtures" use a chemical reaction to introduce gas bubbles and voids into a flowable fill mix. A cellular grout that is under 100 lb/ft^3 for a wet cast density is very difficult to achieve using this formulation method. The chemical reactions are limited in the amount of air that can be introduced as off gases in the formulation of a cellular grout. And without the use of a foaming generator it is difficult to introduce enough air into a flowable fill mix to create a target wet cast density between 40 lb/ft^3 and 75 lb/ft^3.

While the annular space can physically be filled with these higher density grouts, the risk of hydrostatically overstressing the HDPE liner will increase as the density of the grout increases. Additionally, some admixtures are exothermic, which will further raise the curing temperature of the grout. The heat of hydration for the selected grouting agent should always be considered. Increased curing temperatures will result in a decrease on the allowable loads recommended for the liner. Expansive grouts are not recommended.

It is suggested that grout mixtures, which are utilized to fill the annulus where the wet cast density exceeds 75 lb/ft^3, should be independently evaluated for suitability of use by the owner or the installer. Direct consultation with the commercial admixture manufacturer is recommended in these instances. Increased grout densities will increase the likelihood that the annular space grouting will need to be performed in lifts to limit stresses in the liner.

Consideration to hydrostatic pressures on the liner should always be considered prior to creating or injecting the selected grout, regardless of actual grout density being used.

Cellular Grout

Cellular grout is a low density grout mix comprised of cement and water (or cement, fly ash, and water) with a foaming agent added to inject a large volume of macroscopic air bubbles into the grout mix. This admixture greatly reduces the density, or unit weight, of the grout mix, and often will result in 40% or greater air content in the finished product. A foam generator unit is normally required to obtain such a high percentage of air and to reduce grout density. Most additive manufacturers report a maximum of 20% to

To produce cellular grout, a concentrated foaming agent is required in combination with various types of foam generating equipment. This equipment may generate foam via air pressure or water pressure.

30% air when using additive products that do not utilize a foam generation unit. This is because the churning action of the truck mixer alone is relied upon to entrain air into the grout. Therefore cellular grouts made with additive products that do not utilize a foam generation unit are often higher density grouts than those created using foam generators.

In cellular grouts, the air bubbles stay in suspension long enough for the cement paste to coat them and begin to hydrate, or "set," and the air bubbles replace the aggregates commonly found in products such as concrete. Once hardened, the grout mix has a compressive strength that can range from 200 psi to well over 1,000 psi. These values are higher than that of the bedding soil that was originally around the host pipe.

Cellular grouts can be designed to have wet densities, while still in the "plastic" stage, ranging from 30 pcf to 80 pcf. With this lower unit weight the grout applies less hydrostatic pressure on the Snap-Tite® liner than with a denser product. An additional benefit is that the grout is able to travel longer distances within the sliplined pipe system while also flowing through the holes or separated joints of the host pipe, filling the voids in the surrounding bedding materials. These voids were originally caused by the soil infiltrating into the host pipe through separated joints or holes in the pipe. The voids are thus filled with the grout flowing through these same openings.

Grout Properties

Density or Unit Weight

The density of a grout mix is the weight, in pounds, of a defined volume of the grout, for instance one cubic foot of material. Density is often reported in units such as "pounds per cubic foot (pcf)." The unit weight is measured by collecting a sample of the grout mix and filling a container of a pre-determined volume. Typically a one-half cubic foot metal unit weight bucket is used. After completely filling the bucket and striking off the surface, the bucket is weighed. The weight of the empty bucket is subtracted from this value and the resulting number is multiplied by two (using a one-half cubic foot bucket) to obtain the density of the grout mix (pcf).

Air Content

The air content is the amount of air introduced into the grout mixture; this is reported as a percentage of the total volume. Certain chemical admixtures have the ability to entrain air around sand particles in the mix. These are macroscopic air bubbles and typically add 3-5% of air to the mix. The advantages of having air bubbles in a grout mix are that they provide for better flow of the material and give greater resistance to the damaging effects of a freeze/thaw environment.

Foam generators can introduce up to 70% air to create highly-designed and consistent air incorporation. These air bubbles are attached to the cementitious particles in the grout. The resulting grout mix can appear to have a foam consistency. The larger air content in the material greatly enhances the ability of the grout mix to flow longer distances and through smaller spaces.

Viscosity

The viscosity is the thickness of a liquid or "a measure of a fluid's resistance to flow." A low viscosity is desirable for grout mixes in a Snap-Tite® application. The viscosity of a grout mix is measured by use of a flow cone as described by ASTM C939. A slump test is not applicable in determining the flow of a grout mix.

Compressive Strength

The compressive strength of grout is the amount of compressive force that the material can resist after the grout material is allowed to set. This is determined by obtaining a grout sample and filling a cylindrical

container, typically a mold 4" in diameter and 8" in height, and testing the sample in a compressive strength test apparatus. This test is conducted in pre-determined time increments, such as sample ages of 1-day, 3-days, or 7-days after the grout mix is batched. ASTM C1019 describes this testing process.

While compressive strength is commonly specified for concrete and grout used in other applications, this is not an important property for grout used to fill the annular space after sliplining a culvert. Practically any grout used will have compressive strength values greater than the original soil surrounding the host culvert. The significant property of the grout mix is the density of the material. However, as a general rule, as grout density is increased, so is the compressive strength of the grout.

Applications & Grout Selection

The Snap-Tite® liner system is used in a variety of culvert and gravity-flow pipe applications. There are many types of grout available. A thorough analysis of the existing culvert pipe is needed before making liner and grout selections. Engineering analysis and/or consultation may additionally be required.

Condition of Host Pipe

The condition of the pipe to be lined is important in determining the liner and grout requirements. Grout will fill the space between the liner and the pipe, and assist in maintaining a pipe seal. If the existing pipe has lost its ability to handle soil and highway loads, a liner and a grout must be selected to handle these loads. In most situations, a liner with a DR of 32.5 and a low-density foam grout with unit weight values of 40 pcf or greater will be suitable.

If the host pipe is in good condition, i.e., without corrosion holes or separation of the pipe joints, then grouting of the annular space may or may not be needed. In this application, the remaining site conditions should be evaluated to determine the long term advantages and disadvantages of grouting.

Length of Host Pipe

The length of the pipe is a very important consideration when grouting. If the host pipe is short, i.e., less than sixty linear feet in length, almost any mix discussed can be used as long as low-pressure is utilized for installation. Availability and economic factors play a larger role in grout selection in these applications.

Elevation can be used to assist with grouting short runs of pipe using the effects of gravity, depending upon the flow rate or viscosity of the grout. As the length of pipe increases, the amount of pressure required for grouting the annular space may also increase, unless the viscosity of the grout is changed.

Volume of Annular Space

Annular space is the area between the liner and the existing pipe. If there is only a small space resulting after sliplining Snap-Tite® into the existing pipe, it will be more difficult to fill this space compared to a sliplining situation where a large annular space is the result. More pressure may be required to fill a small annular space compared to a larger annular space. The density of the grout should be reduced as much as possible to reduce the risk of hydrostatic collapse to the liner during the grouting operations.

When the annular space is small, a high flow, low-density grout under low-pressure (less than five feet of head or 2 psi) will fill this space. Portland cement grouts containing fine aggregate, such as sand, often require higher pressure than is desired to flow the length of the pipe. Additionally, the sands can at times begin to settle out of the grout mix and accumulate in the fill tubes. This can possibly lead to constricting or clogging the fill tube. If this type of grout must be used, it is recommended that multiple grout insertion pipes are placed at various lengths within the annular space. This will lower the force required to place the grout within the area.

If there is a large difference between the diameter of the liner and the existing pipe, a grout with a higher density will apply more pressure to the liner during installation. A lower density grout is once again preferred in this situation as well.

Flotation

Why is flotation a concern? During the grouting operation, the polyethylene pipe will float in the grout material and rise to the top of the host

pipe, unless it is restrained or held down in some way. This may change the grade of the liner, affecting the water flow through the lined pipe. The selection of the grout can affect the flotation concern. Lower density grouts create lower resulting buoyant forces.

There are numerous methods that can help control this problem. One method is to attach wood, plastic or metallic blocks inside the culvert, along the top of the host pipe or the liner itself, to minimize the flotation. This technique is commonly referred to as bridging or blocking. Runners attached to the bottom of the liner are also used to center the liner.

Sand bags, or other materials, can be used to weigh the liner down and counter the buoyancy factor to prevent the liner from floating, along with the possibility having the liner partially or fully filled with water to help neutralize any buoyant force. Underwater lining applications have been successfully completed with Snap-Tite® and in these installations the liner has almost neutral buoyancy, since the HDPE pipe has a density that is very close to that of fresh water.

Elevation Change

When there are large changes in elevation between the ends of a pipe being lined with Snap-Tite®, the grout will exert additional pressure on the liner material, and additionally on the bulkhead positioned on the down stream end of the lined host culvert. When the elevation difference is greater than five feet, the method of grout installation must be evaluated to prevent hydrostatic collapse of the liner. Grouting in lifts is usually the best method to prevent liner collapse, leakage at the bulkhead and other potential problems.

Elevation, or gravity, can be used to provide pressure for grouting short runs of pipe, depending upon the flow rate of the grout. As the length of pipe increases, the amount of pressure required for grouting the annular space increases.

Unconstrained Buckle & Grouting Pressures

The following equation can be used to assist the designer to evaluate an allowable load on the HDPE liner.

Equation 7-1

$$P_{WU} = \frac{f_0}{N_s} \frac{2E}{(1-\mu^2)} \left(\frac{1}{DR-1} \right)^3$$

Where:

P_{WU} = allowable unconstrained pipe wall buckling pressure, psi
DR = Dimensional Ratio
E = apparent modulus of elasticity of pipe material, psi
f_0 = Ovality Correction Factor, Figure 7-1
N_S = safety factor
I = Pipe wall moment of inertia, in4/in
μ = Poisson's ratio
D_I = pipe inside diameter, in

Figure 7-1

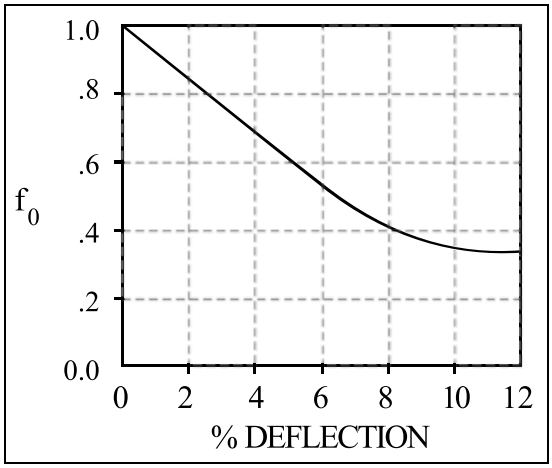

Ovality Compensation Factor, f_e

**Ovality compensation factors and buckle equation presented in PPI Handbook of Polyethylene.*

An approach often utilized by designers is to use a 10-hour pipe modulus based on a 73 degree Fahrenheit temperature. This modulus is used since the heat of hydration for the cementations fill usually does not increase until the grout material begins to set up. When the grout materials begin to set up, they also begin to provide support to the liner nearly simultaneously. The Plastics Pipe Institute provides an industry established modulus for a PE3408 material of 62,000 psi. based on a 10-hour load at 73 degrees Fahrenheit. Most grouts will provide structural support due to curing within this 10-hour time span.

It is also an industry standard to base calculations on a 0.45 Poisson's ratio and an assumed deflection of 3% existing in the HDPE liner. This would result in an ovality factor of 0.76 using Figure 7-1.

If a 2 to 1 safety factor is used with the approach described above, an HDPE liner made with a DR 32.5 pipe wall would have an allowable external pressure of 2 psi. This is consistent with the allowable load suggested by ISCO's Snap-Tite® Division for RPS liners.

Culvert Circumstances

The specific culvert circumstances have the greatest impact on the type of grout that should be used to fill the annular space. Table 7-1 is provided to assist in this determination. This is an aid only; it should not be considered a definitive recommendation of what type of grout to use for any particular application.

Grouting Operation

Preparation

The preparation for the grouting operation begins before installing Snap-Tite® pipe into the existing culvert pipe. The existing culvert should be inspected to determine the following factors:

- Point of entry for grout
- Length and slope of culvert
- Existence of corrosion holes or separated joints in culvert
- Evidence of voids in the road bedding and fill materials
- Available workspace
- Traffic control
- Protection of environment and existing conditions

Table 7-1

		Condition of Host Pipe		Length of Host Pipe (LF)			Culvert Circumstances	
	Density Range (pcf)	Good	Failed or Failing	< 50	50 – 125	> 125	Light Traffic	Heavy Traffic
3-Sack Flowable Fill	130-135	x		x			x	x
Reduced Density Flowable Fill	90-120	x	x	x	x		x	x
Cellular Grout	40 – 80	x	x	x	x	x	x	x

Point of Entry for Grout

There are many ways that grout can be placed into the annular space of a rehabilitated culvert. It can be pumped in, under low-pressure, or allowed to flow in by gravity. This can be done through injection ports placed through the bulkheads or through a hole or holes cut into the top of a metal culvert pipe, behind the bulkhead. The grout may flow into the annular space though these holes, on one end or in both ends of the culvert.

Length and Slope of Culvert

Elevation is normally used (provided there is less than a ten foot elevation change) to provide static head pressure for grouting short runs of pipe up to sixty to eighty feet in length, depending upon the flow rate of the grout. As the length of pipe increases, the amount of pressure required for grouting the annular space may also increase.

Measure the elevation change and the total distance between the inlet and the outlet and determine the total length the grout must flow. This information will help in the selection of the grout, affect the number of fill or vent tubes, and influence the method of grout injection.

Existence of Corrosion Holes or Separated Joints

If either of these factors is observed during the culvert investigation, the possibility exists that there are voids in the soil bedding around the original culvert structure. An additional volume of grout will be required, beyond the calculated annular space volume, to fill these voids. An estimation of this additional volume (10%, 20%, etc.) should be made at this point. If corrosion or separated joints have created obstructions along the ID of the pipe, these obstructions should be removed to prevent interference during the sliplining process.

Blocking

As discussed before, flotation of the liner is of concern when a liner is to be grouted or there is ground water present. To prevent flotation, using blocks or skids around the pipe can center the Snap-Tite® culvert liners. Blocks or skids are typically installed in a staggered pattern. Spaces are left between the blocks or skids to allow grout to flow under and around the liner.

Blocks are installed in the top 120 degrees of the culvert. For culverts 48” in diameter or larger, blocks are attached to the old culvert. The first block is often installed at 11 o’clock, and then a space of four feet is left before the second block is installed at the 12 o’clock position. Then a space is left and the third block is installed at 1 o’clock. These blocks are usually four to eight feet in length. The thickness is determined by the difference in the ID of the culvert and the liner. The upper skids must have structural strength adequate to resist the buoyant force created as the liner is grouted in place. Wood and solid plastic will work. Styrofoam does not have adequate compressive strength to work for many liner sizes.

To prevent the Snap-Tite® liner from moving off-center during the grouting operation, grout may be placed in a staggered sequence, using multiple grout injection points on each side of the liner. This will help assure an even distribution of grout on both sides of the Snap-Tite® pipe.

Blocking can also be used to bridge any gaps created by separated joints in the existing host pipe. This can help to prevent the Snap-Tite® liner from catching on the gaps in the disjointed sections, and aid in the sliplining process.

Vent Ports

Vent ports should be located at strategic positions though the bulkhead or in the top of the host pipe, depending on the site conditions. A minimum of one vent port, in addition to the grout injection ports, is recommended, unless the grout is inserted into the annular space

through a hole large enough to serve as both. Vent ports help to prevent pressure buildup in the annular space and also serve as grout verification points. Preparations must be made to adequately close off the opening once grout begins to flow out of the area. A vent port placed at the bottom of the bulkhead will help drain water that may exist in the annular space during the grouting operations.

Bulkheads

The purpose of the bulkhead is to retain the grout within the annular space until hydration occurs and the grout material hardens. Many different materials can be used to accomplish this task, such as a low-slump concrete mix, a stiff grout mix, wood, Oakum water-activated urethane rope, soil, etc. The conditions at the site, the type of grout selected, and what substances are available at the time will dictate what bulkhead material is best for an application.

Grout Injection

Grout should be placed into the annular space slowly and patiently. The material must be

given time to flow along the pipeline and run out though any holes that may be in the host pipe, or through separated joints in the line.

When possible, gravity should be used to place grout into the annular space. A low density or cellular grout material will flow along the space, exiting out through holes in the host pipe, or separated pipe joints, and replace lost bedding soil around the host pipe. Once the voids are filled, the grout will continue to flow down the pipe length and slowly fill the annular space between the liner and host pipe. Again, patience is critical with the grouting operation.

Grout pumping may be necessary in some applications. The pump pressure is used to move the grout from the mixing tank, through the injection port, into the annular space. For long culverts, multiple sections of injection pipes in varying lengths can be used to place the grout further into the culvert to efficiently fill the space.

At the point where the grout exits the injection pipe, the pressure quickly dissipates to zero. If a back pressure is noted by the pump operator, the pumping should immediately be stopped. Many pump truck pressure gauges don't have the sensitivity to perceive a low-pressure (2 psi). Exerting unnecessary pressure within the annular space, on the outside of the culvert liner, can cause unwanted problems, from grout leaking through the joints to a catastrophic collapse of the liner pipe. Although this occurrence is rare, careful planning, patience, and close observation should be used during the grout injection operation to help mitigate any potential damage to the liner or the bulkheads.

Grout Verification

As mentioned in the preparation section, grout verification ports can be placed to monitor the grouting operation. Short pieces of pipe can be placed through the bulkheads to serve initially as vent ports for escaping air in the system and later as grout verification ports, during the installation process. When grout begins to flow from these lines, a cap can be placed over the pipe to stop the flow. A verification pipe with a threaded terminating end that extends from the bulkhead can easily be sealed as it will accept a threaded cap to terminate the pipe.

Quality Control & Testing

The primary property to identify for QA/QC is the unit weight or mass of the grout that is being placed. The density (unit weight) of the material has a greater effect on the performance of the culvert rehabilitation than the compressive strength value of the grout.

Practically any grout selected will be stronger when compared by compressive strength than the bedding material around the host pipe. And this is the material that the grout is intended to replace and serve in its absence.

The equipment required to determine density is a calibrated unit weight bucket, a tool to strike off or level the surface, and a scale. Testing, ASTM C138, of the mix prior to insertion into the annular space of the sliplined culvert is needed.

The density (unit weight) of the material has a greater effect on the performance of the culvert rehabilitation than the compressive strength value of the grout. Practically any grout selected will be stronger than the bedding material around the host pipe. This is the material that the grout is intended to replace and serve in its absence.

Grout can be seen exiting from the PVC port

Trouble Shooting Bulkhead leaks

When grouting the annular space of a sliplined pipe, the grout is placed within a closed space and exerts pressure on the bulkheads of end walls constructed at each end of the culvert. The best prevention against bulkhead leaks is to construct an end wall strong enough to withstand the internal hydrostatic pressure exerted on it by the grout. A bulkhead with a thickness of 18” to 24” is typically adequate for most culvert relining projects.

If a cementitious material, be it a concrete mix or a stiff grout mix, is used for the end walls, then drying/shrinkage of the material is a concern. To protect against grout leaks in this instance, a quick-set, non-shrink grout material should be on site on the day of the grouting operation.

A preventive maintenance procedure is to apply this material in a thin layer over the cured bulkhead or end wall prior to starting the grouting operation. This material typically sets in15 minutes and will help plug any cracks in the bulkhead or gaps between the end wall and grout insertion tubes and vent ports.

Material Sources

Grout Supplier

A concrete ready mix supplier, or batch plant, local to the project site is a source for the grout and for a material that can be used to construct the culvert bulkheads. These facilities have supplies of cement, sand, and water as well as the equipment to measure and adequately mix the components. A mix design may be submitted to the batch personnel to assure a material with appropriate density is obtained.

In some locations, grouting contractors are available that have all-inclusive units and can provide appropriate grout mixtures, as well as pumping apparatus, to place the grout into the culverts. These contractors are skilled in all types of grout needs and should serve the project well. Similar services can be additionally obtained directly through ISCO and our Snap-Tite® division. Your Snap-Tite® representative can assist you with obtaining grouting services from ISCO.

Admixtures

There are numerous manufacturers of chemical admixtures utilized in grout formulation. The admixtures include macro air-entraining agents, retarders to delay the hydration of the cement in the mix, and foaming agents to inject increased volumes of air into the grout mix. Cellular concrete or “foamed” concrete mixes use wetting agents as a type of admixtures.

There are also many regional manufacturers for foaming agents, such as Vermillion & Associates, Cellular Concrete Solutions, Cellular Concrete Technologies and Elastizell. Many of these companies can also provide

foam generation equipment for use in creating cellular grouts. The admixture manufacturer should be contacted for support on proper use of their specific foaming agents.

There are chemical admixture manufacturers that distribute nationwide, such as BASF (Master Builder's product line) and W.R Grace. Rheocell Rheofill, manufactured by BASF, is a ready-to-use, self-contained product for use in various flowable fill applications where a limited reduced density grout may be desirable. Direct contact with the chemical admixture manufacturer is recommended when these additive packages are selected for grout formulation.

Grout Pump Equipment

The pumping apparatus best suited for grouting annular space should be rotor/stator or squeeze pumps. Other pump types, such as piston pumps, can be used but these may force some of the air out of the grout mixture. With less air in the mix the resulting density will increase.

Mix designs

The mix design for grout used to fill the annular space created in a Snap-Tite® culvert lining project will vary depending on the type of grout selected for the application, i.e., flowable fill, reduced density flowable fill, or cellular grout.

Flowable Fill

As stated earlier, flowable fill is comprised of a mixture of cement, sand and water. A portion of the cement may be substituted with fly ash, and chemical admixtures may be used to affect certain properties of the mix.

Different sources of materials will have an impact on the specific gravities of the materials. This is especially true with sand and fly ash. The specific gravity value of the material is used to calculate its absolute volume in the mix. The volume value is used to calculate the total yield of the batch. The quality control manager for the ready-mix supplier can help formulate a flowable fill mix based on their specific materials.

Reduced Density Flowable Fill

To reduce the density of a flowable fill an admixture may be considered by the owner or installing contractor for incorporation into the grout formulation mix. Two such admixture products are Rheocell Rheofill, manufactured by BASF, and DaraFill, produced by Grace Construction Products.

The addition of the specialty, density-lowering admixture is made at the mix plant or at the jobsite depending on product being used. The admixtures are added directly into the concrete mixer after batching. They are designed to generate air contents from 15% to 25% in the grout mix. Typically these grouting mixtures exceed a density of 100 lb/ft^3.

Cellular Grout

Cellular grout may be produced with a grout mixture containing sand, cement and water or with a mixture of cement and water only. In both cases a portion of the cement may be replaced with fly ash to reduce the cost of the grout.

The addition of the liquid foaming agent is made at the jobsite. The foam is manufactured using an air-foaming generator and dispensed directly into the concrete mixer. To determine the amount of foaming required, unit weight measurements should be taken until the desired unit weight of the grout mix is obtained.

It is unlikely that a cellular grout can be manufactured with a density below 100 lbs/ft^3 if a foaming generator is not used in the formulation process.

Table 7-2
Cellular Grout Mix - 40 lb/ft³ using Foam Generator

Component		Units	Weight (lbs)	Volume (Yd³)
Type III Portland Cement	6,950	lbs	6,950	1.4
Water	418	Gallons	3,488	2.0
Foam	179	Cu./Ft.	716	6.6
		Mix Totals	11,154	10.0
Net Wet Cast Density =			**41.3**	**lb/ft³**

Foam Instructions

Component	
Varimax HS-320	61.71 Oz
Water	82.87 Gallons

Mix together and run through foam generator for 8 minutes and 8 seconds.

Table 7-3
Cellular Grout Mix - 55 lb/ft³ using Foam Generator

Component		Units	Weight (lbs)	Volume (Yd³)
Type III Portland Cement	9,700	lbs	9,700	1.8
Water	584	Gallons	4,877	2.9
Foam	143	Cu./Ft.	572	5.3
		Mix Totals	15,149	10.0
Net Wet Cast Density =			**56.1**	**lb/ft³**

Foam Instructions

Component	
Varimax HS-320	49 Oz
Water	66.2 Gallons

Mix together and run through foam generator for 6 minutes and 30 seconds.

Table 7-4
Cellular Grout Mix - 70 lb/ft³ using Foam Generator

Component		Units	Weight (lbs)	Volume (Yd³)
Type III Portland Cement	13,368	lbs	13,368	2.5
Water	805	Gallons	6,720	4.0
Foam	95	Cu./Ft.	380	3.5
		Mix Totals	20,468	10.0
Net Wet Cast Density =			**75.8**	**lb/ft³**

Foam Instructions

Component	
Varimax HS-320	35.75 Oz
Water	43.98 Gallons

Mix together and run through foam generator for 4 minutes and 51 seconds.

[1]Mix Ratios provided by Vermillion and Associates.
[2]Construction Specifications are available on www.culvert-rehab.com

Chapter 8
Structural Design

SECTION

8-1 Outline of Structural Design Methodology 61
8-2 Design Chapter Introduction 61
8-3 Design Criteria 61
Pipe Section Properties 61
HDPE Material Considerations 62
Soil Considerations for Direct Burial 62
Grout Considerations for RPS 61
Loads 68
8-4 Direct Burial Pipe Design Procedure 70
Wall Thrust 72
Deflection 72
Buckling 73
Bending Strain and Combined Strain 73
8-5 Direct Burial Minimum and Maximum Cover 74
Minimum Cover in Live Load Applications 74
Maximum Cover in Deep Burial Applications 75
8-6 RPS Design Procedure 76
CANDE-2007 FEA Model 77
Grout Stress and Strain Analysis 78

FIGURES

8-1 Typical Trench and Backfill Detail 63
8-2 AASHTO H-25 and HS-25 Highway Load 68

TABLES

8-1 Section Properties for Snap-Tite® DR 32.5 62
8-2 Long- and Short-Term HDPE Properties 63
8-3 Modulus of Soil Reaction, E' 64
8-4 Secant Constrained Soil Mudulus, Ms 65
8-5 Shape Factors, D_f 66
8-6 Grout Design Properties 67
8-7 Live Load Data for AASHTO H-25 and HS-25 69
8-8 Temporary Construction Loads 69
8-9 LRFD Load Factors 71
8-10 LRFD Resistance Factors 71
8-11 LRFD Load Modifiers 72
8-12 Direct Burial and RPS Minimum Cover Requirements ... 75
8-13 Construction Loads Direct Burial and Minimum Cover .. 75
8-14 Direct Burial Maximum Cover Requirements 76
8-15 RPS Design Criteria 77

8-1 Outline of Structural Design Methodology

This chapter describes the design methodology for Snap-Tite® polyethylene pipe in direct burial conditions and for sliplining applications. Critical Snap-Tite® pipe design properties (or section properties) for the pipe are set forth in this chapter. Material properties, backfill criteria, grout properties and load conditions are also factored into the design method presented in this chapter. It is noted that the engineer should verify backfill properties and grout properties for specific project and site conditions. Pipe must be installed as designed to perform as expected.

Direct burial refers to installing Snap-Tite® in embankment conditions. The direct burial design procedure evaluates wall thrust, deflection, buckling, bending strain, and combined strain and establishes limits on each condition. Minimum cover in trafficked installations, and maximum cover heights under a variety of backfill conditions are shown in Tables 8-12, and 8-14, respectively.

Rehabilitated Pipe Systems (RPS) refers to installing Snap-Tite® in an existing culvert and placing cementious grout in the annular space between the two pipes. The RPS design procedure evaluates grout thrust capacity, grout tensile strain, HDPE wall thrust, deflection, buckling, bending strain, and combined strain, and establishes limits on each condition.

Cover heights for Snap-Tite® can be in excess of 50 feet for direct burial applications and 70 feet for RPS systems; however, contact your Snap-Tite® representative for a review of the installation and backfill procedure.

8-2 Design Chapter Introduction

This chapter addresses design considerations for two applications of Snap-Tite®. The most basic application is direct burial installations of Snap-Tite®. A second application of Snap-Tite® addressed in this chapter is a rehabilitated pipe system (RPS).

In the case of direct burial of Snap-Tite® pipe, the design criteria depends upon proper backfill. Deflection of Snap-Tite® (and other flexible pipe) allows loads to be transferred to and carried by the backfill. The design method presented in this chapter is based on the American Association of Highway Transportation Official (AASHTO) Load and Resistance Factor Design (LRFD) Section 12 design criteria.

In the case of the Rehabilitated Pipe Systems (RPS), the design criteria are based on the American Association of Highway Transportation Official (AASHTO) Load and Resistance Factor Design (LRFD) method. Analysis is performed with the CANDE-2007 computer program. Additionally, the CANDE-2007 finite element analysis is supplemented with analytical mechanics of material analysis.

The information in subsequent areas of this chapter provides a step-by-step guide for the structural design of Snap-Tite® direct burial and RPS pipe systems. The methodology represents the state-of-the-art design procedure.

8-3 Design Criteria

Design of polyethylene pipe requires an understanding of variables that influence the behavior of the installed pipe. These variables include pipe section properties, material properties, installation conditions, backfill and/or grout properties, and the load situation. All of these elements define the response of the pipe system to loading. As previously mentioned, it is incumbent upon the design engineer to verify the physical properties of the variables that influence the behavior of the installed pipe, which includes backfill and grout properties. This section describes the criteria that enter into the design procedure presented in the following sections.

Pipe Section Properties

Pipe properties necessary for soil-structure interaction design include: the moment of inertia of the wall profile (I), distance to the neutral axis (c), and the section area of a longitudinal section (A_S). These properties determine how the pipe will behave when subjected to loading conditions. Pipe stiffness (PS) is a measure of the pipe's flexibility and is measured in the laboratory by gauging the force required to deflect the pipe 5% of its inside diameter. Section properties of Snap-Tite® with a dimension ratio (DR) of 32.5 are presented in Table 8-1. For section properties of other DR products contact Snap-Tite®.

Table 8-1
Section Properties for Snap-Tite® DR 32.5 Pipe

Outside Diameter, OD (Inches)	Inside Diameter, ID (Inches)	Pipe Stiffness, PS* (pii)	Section Area, A_s ($in^2/in.$)	Distance to Centroid, c (Inches)	Moment of Inertia, I ($in^4/in.$)
10.75	10.1	16	0.331	0.166	0.0030
12.75	12.0	16	0.392	0.196	0.0050
14	13.1	16	0.431	0.216	0.0067
16	15.0	16	0.492	0.246	0.0099
18	16.9	16	0.554	0.277	0.0142
20	18.8	16	0.615	0.308	0.0194
22	20.6	16	0.677	0.339	0.0259
24	22.5	16	0.738	0.369	0.0339
28	26.3	16	0.862	0.431	0.0534
30	28.2	16	0.923	0.462	0.0655
32	30.0	16	0.985	0.492	0.0795
36	33.8	16	1.108	0.554	0.1133
42	39.4	16	1.292	0.646	0.1799
48	45.0	16	1.477	0.739	0.2685
54	50.7	16	1.662	0.831	0.3823
63	59.1	16	1.938	0.969	0.6070

**Pipe stiffness is based on testing and analytical calculations in ASTM D2412*

HDPE Material Considerations and Properties

High density polyethylene (HDPE) is a visco-elastic material and its behavior is different from elastic materials like steel. Viscoelastic materials, when subjected to constant force, experience stress relaxation over time. Stress relaxation is the decrease in stress under constant force.

When Snap-Tite® is deflected, it will initially experience relatively high stress levels that then quickly decrease. If additional deflection occurs, the stress will again increase and then decrease. More information on this subject is in the Plastic Pipe Institute's Handbook of Polyethylene Pipe in the Engineering Properties Chapter.

Snap-Tite® is made using solid-wall HDPE pipe. The pipe is made to the dimensions and requirements of ASTM F 714. The resin has physical properties as indicated in ASTM D3350 with a minimum cell classification of 345464C. It is noted that Snap-Tite® material exceeds short- and long-term strength requirements established for the corrugated HDPE pipe industry.

The long- and short-term material properties that are critical to pipe design are shown in Table 8-2, along with properties used in the AASHTO LRFD design method described in this chapter. When analyzing H-25 vehicle loading, the short-term material properties are used. When analyzing long-term static loading, the long-term material properties are used.

Soil Considerations for Direct Burial

For direct burial of Snap-Tite® structural performance depends on the interaction between the embedment, or backfill envelope, and the pipe. This interaction is often referred to as soil-structure interaction. Structural considerations of the backfill include the type

Table 8-2
Long- and Short-Term HDPE Properties @ 73 degrees Fahrenheit

	Young's Modulus, E		Tensile Strength, F_u	
Grade of HDPE	Short-Term (psi)	Long-Term (psi)	Short-Term (psi)	Long-Term (psi)
Section 12 HDPE	110,000	22,000	3,000	1,440

Based on LRFD Section 12 Table 12.12.3.3-1

of material and compaction level, dimensions of the backfill envelope, and native soil conditions. Information presented in this chapter is consistent with the backfill and embedment requirements established in ASTM D2321 "Recommended Practice for Underground Installation of Flexible Thermoplastic Sewer Pipe." Direct burial installations of Snap-Tite® should be installed in accordance with ASTM D2321 and AASHTO Section 30. Additionally, dimensions of the backfill envelope and native soil considerations are discussed in ASTM D2321.

The type of material (sand, gravel, clay, etc.) and compaction level (standard Proctor density) determine overall strength of the backfill. Typically, backfill particles that are larger and angular require less compaction effort than particles that are smaller and rounder in order to obtain the required strength.

The strength of the backfill may be described by using modulus of soil reaction (E') or secant constrained soil modulus (M_s). The modulus of soil reaction (E') is an empirical value developed by the Bureau of Reclamation, and is used to calculate deflection. Table 8-3 presents the E' values for several different materials and compaction levels. The secant constrained soil modulus (M_s) is laboratory derived soil property and is used for most design calculations. Values appropriate for design are shown in Table 8-4.

Native soils should be considered for backfill, if they meet the criteria of Table 8-3 and Table 8-4. Other backfill material like flowable fill may be used. However, special construction and installation precautions must be used when using flowable fills. Engineers should contact Snap-Tite® when using flowable fill for direct burial application. Figure 8-1 illustrates a typical trench and backfill dimensions.

Figure 8-1
Typical Trench and Backfill Dimensions

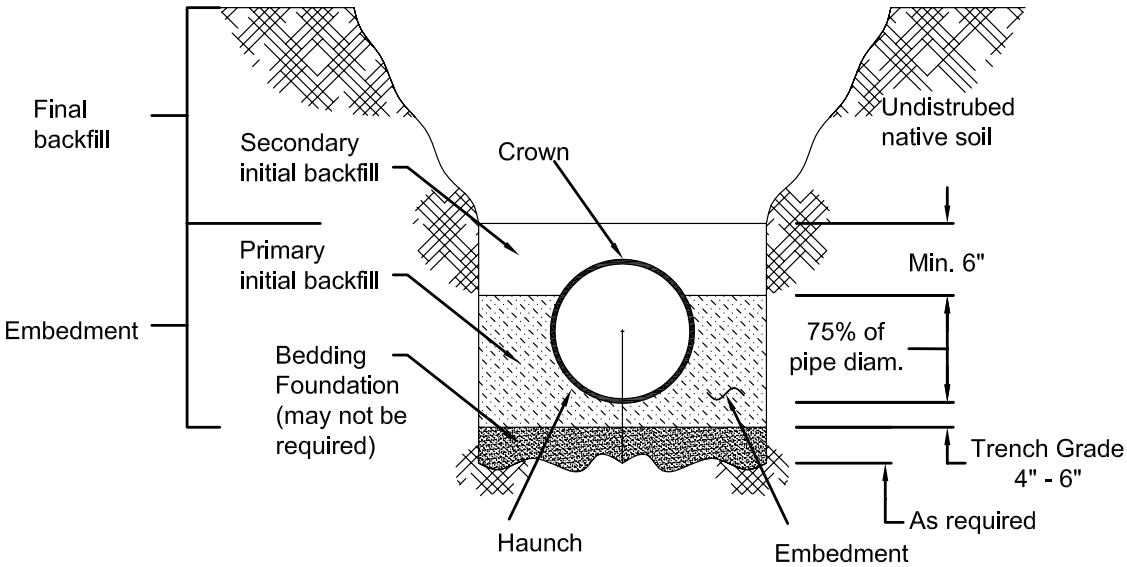

Table 8-3
Modulus of Soil Reduction

EMBEDMENT MATERIAL DESCRIPTIONS					EMBEDMENT PLACEMENT		SOIL MODULUS (E') FOR COMPACTED EMBEDMENT (psi)			
ASTM D2321[1] Class		ASTM D2487 Notation		AASHTO M43 Notation	Min. Std. Proctor Density (%)	Lift Placement Depth	Dumped	Slight <85%	Moderate 85%-95%	High > 95%
IA	Open-graded, clean manufactured aggregates	N/A	Angular crushed stone or rock, crushd gravel, crushed slag; large voids with little or no fines	5 56	Dumped	18"	1,000	3,000	3,000	3,000
IB	Dense-graded, clean manufactured, processed aggregates	N/A	Angular crushed stone or other Class IA material and stone/sand mixtures; little or no fines							
II	Clean, coarse-grained soils	GW	Well-graded gravel, gravel/sand mixtures; little or no fines	57 6 67	85%	12"	N/R	1,000	2,000	3,000
		GP	Poorly-graded gravels, gravel/sand mixtures; little or no fines							
		SW	Well-graded sands; gravelly sands; little or no fines							
		SP	Poorly-graded sands, gravelly sands; little or no fines							
III	Coarse-grained soils with fines	GM	Silty gravels, gravel/sand/clay mixtures	Gravel & sand with <10% fines	90%	9"	N/R	N/R	1,000	2,000
		GC	Clayey gravels, gravel/sand/clay mixtures							
		SM	Silty sands, sand/silt mixtures							
		SC	Clayey sands, sand/clay mixtures							
IVA[2]	Inorganic fine-grained soils	ML	Inorganic silts and very fine sands, rock flour, silty or clayey fine sands, silts with slight plasticity				N/R	N/R	N/R	N/R
		CL	Inorganic clays of low to medium plasticity; gravelly, sandy, or silty clays; lean clays							
		OH	Organic clays of medium to high plasticity, organic silts							
		PT	Peat and other high organic soils							

Notes:
1) Refer to ASTM D2321 for more complete soil descrpition.
2) Class IVA material may be acceptable for limited applications, contact Snap-Tite® before using
3) Class IVB and Class V are not recommended for use with Snap-Tite®.

Table 8-4
Secant Constrained Soil Modulus, M_s

	Constrained Soil Modulus at Various Depths, Compaction							
	Class I		Class II			Class III		
	Crushed Stone		GW, GP, SW, SP			GM, SM, ML(1), GC and SC with <20% passing the 200 sieve		
Cover Height	Compacted	Uncompacted	95%	90%	85%	95%	90%	85%
Feet	psi	psi	psi	psi	psi	psi	psi	psi
1	2350	1280	2000	1280	470	1420	670	360
5	3180	1440	2450	1440	510	1610	720	380
10	3900	1580	2840	1580	550	1730	750	400
15	4460	1660	3090	1660	590	1790	760	410
20	4980	1730	3270	1730	620	1840	770	420
25	5500	1800	3450	1800	650	1880	790	430
30	5900	1860	3610	1860	690	1920	810	450
35	6300	1920	3770	1920	720	1960	830	460
40	6700	1980	3930	1980	780	2010	860	480
45	7100	2040	4090	2040	790	2050	880	490
50	7500	2100	4250	2100	830	2090	900	510
55	7860	2180	4400	2180	860			
60	8220	2260	4550	2260	895			
65	8580	2340	4700	2340	930			
70	8940	2420	4850	2420	965			
75	9300	2500	5000	2500	1000			

Notes:
1) M_s values presented in the table assume that the native material is at least as strong as the backfill material. If the native material is not adequate, it may be necessary to increase the trench width. Refer to ASTM D2321 for additional information on over-excavation.
2) M_s may be interpolated for intermediate cover heights.

Bedding Coefficient (K)

Another soil related design factor is the bedding coefficient (K). The value of the bedding coefficient depends on the support the pipe receives from the trench bottom. The bedding coefficient can vary from 0.083 for full support in the haunch to 0.11 for no haunch support. Haunching backfill is recommended; however, a conservative value used in design is 0.10. This recommended value accounts for inconsistencies in placement of haunch support.

Shape Factor (D_f)

The shape factor (D_f) is a function of pipe stiffness, type of backfill material, and the compaction level. The shape factor relates deflection and bending behaviors. Table 8-5 lists shape factors for a variety of typical installation conditions. The standard pipe stiffness value for Snap-Tite® pipe is 16.

Table 8-5
Shape Factors, D_f

Pipe Stiffness, PS[3] pii	Gravel [1]		Sand [2]	
	Dumped to slight (<85% SPD)	Moderate to High (≥85% SPD)	Dumped to Slight (<85% SPD)	Moderate to High (≥85% SPD)
14	4.9	6.2	5.4	7.2
16	4.7	5.8	5.2	6.8
18	4.5	5.5	5.0	6.5
20	4.4	5.4	4.9	6.4
22	4.3	5.3	4.8	6.3
28	4.1	4.9	4.4	5.9
34	3.9	4.6	4.1	5.6
35	3.8	4.6	4.1	5.6
40	3.7	4.4	3.9	5.4
42	3.7	4.4	3.9	5.3

Notes:
1) Includes crushed stone, GW, GP, GW-GC, GW-GM, GP-GC and GP-GM materials
2) Includes SW, SP, SM, SC, GM, GC or mixtures of these materials
3) Interpolate for intermediate pipe stiffness values.
4) For other backfill materials, use the highest shape factor for the pipe stiffness.
5) Based on LRFD Section 12 Table 12.12.3.5.4b-1

Grout Considerations for
Rehabilitated Pipe Systems

A low strength cementious material that is flowable is considered a "Grout." Grout is typically composed of 4 primary components (cement, sand, water and a foaming agent). Grout formulas may vary substantially. Foaming agents or admixtures are used to control the density of the grout. This chapter addresses typical grout design properties and introduces material properties necessary for the design of Rehabilitated Pipe Systems (RPS). Specifically these properties are the compressive strength, elastic modulus, and strain capacity of the cementious grout.

It is noted that confining pressure for elastic materials has a significant impact on the modulus, strength and strain capacity. In the case of soils, an increase of 25 feet in burial depth results in a 173% increase in modulus. The impact of confining pressure on soils is also seen in grouts. Using unconfined material properties for this design method is a conservative approach.

Variation in grout properties is most closely tied to density; however other factors can influence the physical properties. Table 8-6 includes typical grout properties for unconfined grout.

Table 8-6
Grout Design Properties

Density (lb/ft³)	Young's Modulus (psi)	Compressive Strength (psi)	Strain Capacity (in/in)
30	43,200	55	0.13%
35	76,900	200	0.28%
40	110,500	375	0.34%
45	144,200	530	0.37%
50	177,900	690	0.39%
55	211,500	850	0.40%
60	245,200	1,010	0.41%
65	278,900	1,100	0.42%
70	312,500	1,300	0.43%
75	346,200	1,490	0.43%
80	379,900	1,650	0.44%
85	413,500	1,810	0.44%

Notes:
1) Design properties based on limited testing. Installations with a design safety factor of less than 2 should perform testing to verify specific grout design properties.
2) Compressive strength based on unconfined compressive strength.
3) Data for modulus and compressive strength is based on independent testing performed by Metro Testing Laboratories.

Grout Modulus

Grout testing was conducted on over 20 samples of various grout formulas and densities. As a result of the grout testing a relationship between the grout density and associated strength and modulus were developed. Equation 8-1 illustrates a linear analytical relationship between grout density and modulus. This linear relationship was developed based on unconfined compression testing for grout densities ranging between 30 lb/ft³ and 85 lb/ft³.

Equation 8-1
Modulus as a Function of Density

$$E = 6{,}733\rho - 158{,}747$$

Where:

$E \equiv$ Modulus of Elasticity (psi)

$\rho \equiv$ Grout Desnity (lb/ft³)

Grout Strength

Strength testing is based on an unconfined strength of the grout. When the RPS is installed in deep burial conditions, the confining pressure of the overburden can be substantial. Additionally, the host pipe may offer some confinement of the grout. However, for the purpose of this design method the strength of the grout is assumed to be the unconfined grout strength. This offers a substantial level of conservatism in the analytical solution presented in chapter 9. The relationship between density and unconfined grout strength is shown in Equation 8-2:

Equation 8-2
Strength as a Function of Density

$$\sigma = 31.926\rho - 900.98$$

Where :

$\sigma \equiv$ Unconfined Compressive Stength (psi)

$\rho \equiv$ Grout Density (lb/ft³)

Grout Strain

Similar to most elastic materials, the grout strength and strain is proportional to the modulus. This relationship is shown in Equation 8-3. Since the modulus and strength are based on unconfined conditions, Equation 8-3 yields the unconfined strain capacity. The grout strain capacity shown in Table 8-6, are based Equation 8-3.

Equation 8-3
Strength as a Function of Density

$$\varepsilon = \frac{\sigma}{E}$$

Where :

$$\varepsilon \equiv \text{Strain Capacity, in/in}$$

$$\sigma \equiv \text{Strength, psi}$$

$$E \equiv \text{Modulus, psi}$$

Loads

Loads are typically either a live load or a dead load. The most common live loads in pipe applications are vehicular loads, usually from construction equipment, trucks, railroads or aircraft. The soil load is the most frequent type of dead load consideration; however, groundwater and foundations are other types of dead loads that should be considered when designing a direct burial pipe system or a Rehabilitated Pipe System (RPS).

Live Loads

Vehicular loads are often based on the AASHTO wheel loading configuration. These wheel loading configurations are shown in Figure 8-2, which represents an H-25 or HS-25 wheel loading (i.e. 25 ton semi-truck). The axle loads shown in Figure 8-2 are distributed over a typical design wheel footprint. The tire footprint and wheel loading is defined in LRFD Section 3.6.1.2.2.

In relatively shallow burial depths the pipe can experience an additional force from the dynamics of the vehicle. To account for this additional force, the tire surface pressure is multiplied by an impact factor. For highway loads, AASHTO establishes a range of impact factors from 1.3 at about one foot of cover to 1.1 at just fewer than three feet. Impact has negligible influence at depths over three

Figure 8-2
AASHTO HS-25 Highway Load

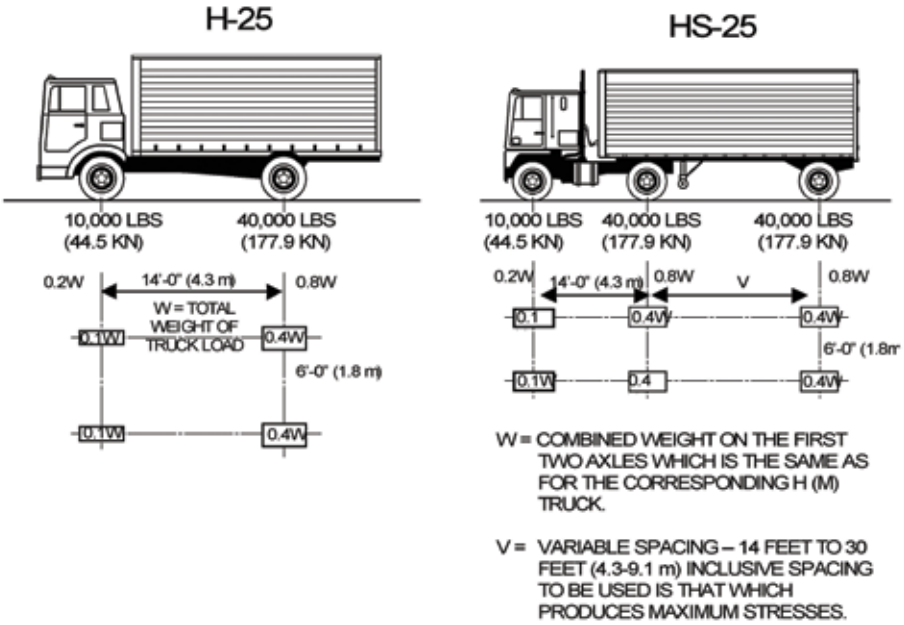

Source: AASHTO Standard Specifications for Highway Bridges

feet. Table 8-7 provides information about the resultant H-25 vehicular forces at various cover heights with impact included in the shallow cover situations. For H-20 vehicles decrease the H-25 live load transfer values (shown in Table 8-7) by 20%.

The intensity of the vehicular load decreases as the burial depth increases. Table 8-7 lists the live load distribution width showing this relationship for an AASHTO H-25 or HS-25 load. This width is based on AASHTO information and assumes that the pipe is installed perpendicular to the direction of traffic.

Table 8-7
Live Load Data for AASHTO H-25 and HS-25

	AASHTO H-25 or HS-25[1]	
Cover, (ft.)	Live Load Transferred (psi)	Live Load Dist. Width, L_w (in.)
1'	15.63	31
2'	6.95	52
3'	5.21	73
4'	3.48	94
5'	2.18	115
6'	1.74	136
7'	1.53	157
8'	0.86	178
10'	negligible	N/A

Notes:
1) Includes impact where necessary
2) N/R indicates that the cover height is not recommended.
3) N/A indicates that the information is not applicable.
4) Information has been modified from Buried Pipe Design, Moser, McGraw-Hill, 1990, p. 34.

Some construction vehicles may need to temporarily traverse shallow culverts during the construction process. Construction vehicles, such as many types of paving equipment are typically not as heavy as the H-25 design load. For situations with relatively light construction vehicles, the one-foot minimum cover criteria discussed can be decreased during the construction phase. Table 8-8 presents the surface applied loads and the associated allowable minimum cover for temporary applications. These criteria should only be employed during construction; finished projects should always have minimum cover described in Table 8-8.

Heavy construction traffic is a concern for buried flexible pipe when buried at shallow depths. These high surface pressure loads may reduce the safety factors below recommended levels. It is recommended that two to three feet of cover be used over the pipe in installations involving construction vehicles between 30 ton per axial and 60 ton per axial. Heavier loads will require at least three feet of cover. This additional cover is typically mounded and compacted over the pipe during the construction phase. Following construction, the mound is removed to the final construction grade.

Table 8-8
Temporary Minimum Cover Requirements for Snap-Tite® DR 32.5 Pipe with Light Construction Traffic

Vehicular Load At Surface, psi	Temporary Minimum Cover, in. for Snap-Tite® 10"-48" Diameters, (in.)	Temporary Minimum Cover, in. for Snap-Tite® 54" and 60" Diameters, (in.)
75	9	12
50	6	9
25	3	6

Dead Loads

The soil load is calculated in this design procedure using two different techniques, the prism or soil column load (W_C), and the soil arch load (W_A).

Soil Column Load (W_C)

The soil column load is defined as the weight of the soil directly above the outside diameter of the pipe at the height of the pipe crown. The soil column load is used to determine deflection. For flexible pipe, the actual soil load is less than that predicted by Equation 8-4 because the soil load is reduced by frictional or shear forces associated with the soil adjacent to the soil column.

The soil column load is calculated as follows:

Equation 8-4

$$W_C = \frac{(H)(\gamma_s)(OD)}{144}$$

Where:
W_C = soil column load, lb/linear inch of pipe
H = burial depth, ft.
γ_s = soil density, pcf
OD = outside diameter of pipe, in. (Table 8-1)

Soil Arch Load (W_A)

The soil arch load (W_A) analysis more accurately predicts the actual soil load placed on the pipe. The arch load calculation uses the concept of Vertical Arching Factor (VAF), which reduces the load proportional to the stiffness of the pipe. The VAF reduces the soil load in order to account for the support provided by adjacent soil columns.

The soil arch load is determined using the design method specified in AASHTO LRFD Section 12.12.3.4 and is described.

The first step in the soil arch load prediction is to calculate the geostatic load. The geostatic load is determined by calculating the weight of soil directly above the spring line of the pipe. Equation 8-5 is used to calculate the geostatic load above the spring line of the pipe.

Equation 8-5

$$P_{sp} = \frac{(\gamma_s)\left(H + 0.11\frac{OD}{12}\right)}{144}$$

Where:
P_{sp} = geostatic load, psi
H = burial depth, ft.
γ_s = unit weight of soil, pcf
OD = outside diameter of pipe, in. (Table 8-1)

The second step in determining the soil arch load is to determine the Vertical Arching Factor (VAF). This factor accounts for the support provided by adjacent soil columns by reducing the geostatic load. Equation 8-6, is used to calculate the Vertical Arching Factor:

Equation 8-6

$$VAF = 0.76 - 0.71\left(\frac{S_h - 1.17}{S_h + 2.92}\right)$$

Where:
VAF = Vertical Arching Factor, unitless
S_h = hoop stiffness factor;
= $\phi_s M_S R / (E A)$
ϕ_s = capacity modification factor for soil, 0.9
M_S = secant constrained soil modulus, psi (Table 8-4)
R = effective radius of pipe, in.
= OD/2 - c
OD = outside diameter of pipe, in. (Table 8-1)
c = distance from inside diameter to neutral axis, in. (Table 8-1)
E = modulus of elasticity for polyethylene (Table 8-2)*
A = section area, in^2/in (Table 8-1)

** Note: Consider your load duration in selecting the long or short-term modulus. Dead loads use long term modulus. Impact loads normally are short-term.*

The third and final step is to calculate the soil arch load. Equation 8-7 is used to calculate the soil arch load:

Equation 8-7

$$W_A = (P_{sp})(VAF)$$

Where:
W_A = soil arch load, psi
P_{sp} = geostatic load, psi
VAF = Vertical Arching Factor, unitless

Hydrostatic Loads

If groundwater is present and is expected above the spring line, the associated hydrostatic pressure must be accounted for when considering dead loads. Equation 8-8 is used to calculate the hydrostatic load:

Equation 8-8

$$P_W = \frac{\gamma_w (H_g)}{144}$$

Where:

PW = hydrostatic pressure at springline of pipe, psi

γ_w = unit weight of water, 62.4 pcf

H_g = height of groundwater above springline of pipe, ft.

Foundation Loads

Pipe installations beneath or near foundations are subjected to an additional dead load. This additional dead load must be considered before proceeding with the design process. Refer to soil mechanics textbooks to determine the effect of foundation loads.

8-4 Direct Burial Design Procedure

The design of Snap-Tite® in direct burial applications evaluates the critical failure mechanisms of pipe. This design procedure is based on AASHTO LRFD Section 12 design criteria. The design method evaluates the factored capacity and associated factored loading demand placed on the pipe system. The critical failure mechanisms include:

1. Wall Thrust
2. Deflection
3. Buckling
4. Bending Strain
5. Combined Strain

For installations greater than 50 feet contact Snap-Tite® for design guidance. Maximum and minimum cover height tables have been developed based on the following design procedure. See Table 8-14 for maximum allowable burial depths and Table 8-12 for minimum allowable burial depths.

LRFD Section 12 requires that load factors be applied to buried structures such as pipe. As defined by AASHTO, "Load factors are multipliers applied to force effects to account for the variability of loads, lack of accuracy in analysis, and probability of simultaneous occurrences of different loads." These recommended load factors are summarized in Table 8-9.

"Resistance factors are multipliers applied to nominal resistance to account for variability in material, dimensions, workmanship and uncertainty in predicted resistance," as defined by AASHTO LRFD Section 12. Resistance factors related to thermoplastic pipe are specified in LRFD Section 12 Table 12.5.5.-1 and are summarized in Table 8-10. Load modifiers account for ductility redundancy and operational importance. Table 8-11, summarizes the LRFD load modifiers as related to thermoplastic pipe design.

Table 8-10
Resistance Factors

Type of Structures	Resistance Factor, Unitless (ϕ)
Buckling	1.0
Flexure	1.0
Pipe	1.0
Soil	1.0

Table 8-9
Load Factors

Load Combination for Limit State	Earth Pressure Load (γ_{EV})	Water Load (γ_{WA})	Vehicle Live Load (γ_{LL})
Strength Limit I	0.9 – 1.95	1.0	1.75
Strength Limit II	0.9 – 1.95	1.0	1.35
Service Limit I	1.0	1.0	1.0

Table 8-11
Load Modifiers

Load	Modifier (η)	Redundancy
Earth Fill	1.05	None
Live Load	1.0	Redundant
Construction Load	1.0	Redundant

Wall Thrust

The stress (or thrust) in the pipe wall is determined by the total live load and dead load on the pipe. The pipe wall factored thrust resistance, determined by Equation 8-9, must be equal to or greater than the pipe wall factored thrust demand calculated in Equation 8-10. That is to say, the thrust capacity of the pipe wall must be greater than the demand placed on the pipe wall.

Long-term material properties are used in the analysis for dead loads. Short-term material properties are used for live load situations (such as trafficked installations with less than 8 feet of cover) and the analysis includes both live loads and dead loads. The more limiting of the two analyses governs. It is noted that LRFD Section 12 requires that effective wall area be analyzed for profile pipe only. As defined by LRFD Section 12.12.3.5, the factored thrust resistance is as follows:

Equation 8-9

$$T_{cr} = (F_y)(A)(\phi_p)$$

Where:
- T_{cr} = critical wall thrust, lb/linear inch of pipe
- F_y = tensile strength of polyethylene, psi (Table 8-2)
- A = wall area, in²/inch of pipe (Table 8-1)
- ϕ_p = capacity modification factor for pipe, 1.0

The pipe wall factored thrust demand calculated as follows:

Equation 8-10

$$T = 1.3\left(1.5W_A + 1.67P_lC_l + P_w\right)\left(\frac{OD}{2}\right)$$

Where:
- T = calculated wall thrust, lb/in
- W_A = soil arch load, psi (Equation 8-7)
- P_l = live load transferred to pipe, psi (Table 8-7)
- C_l = live load distribution coefficient
  - = the lesser of $\frac{L_w}{OD}$ or 1.0
- L_w = live load distribution width at the crown, in. (Table 8-7)
- OD = outside diameter, in. (Table 8-1)
- P_w = hydrostatic pressure at springline, psi (Equation 8-8)

Deflection

Deflection is the change in diameter that results when a load is applied to a flexible pipe. In pipe design, the vertical dimension is usually of more concern and is typically limited to 7.5% of the base inside diameter. The base inside diameter is the nominal diameter less manufacturing and out-of-roundness tolerances inherent to the manufacturing process.

Pipe deflection is a function of pipe stiffness (PS), soil column load (W_C) and live (W_L) loads, and backfill conditions (E'). This relationship is described in Equation 8-11.

Equation 8-11

$$\Delta y = \frac{K\left[(D_L)(W_C) + W_L\right]}{(0.149)(PS) + (0.061)(E')}$$

Where:
- Δ_y = deflection, in.
- K = bedding constant, dimensionless, 0.10 (typical)
- D_L = deflection lag factor, dimensionless; typically 1.0
- W_C = soil column load on pipe, lb/linear inch of pipe (Equation 8-4)
- W_L = live load, lb/linear inch of pipe
  - = (OD)(live load transferred to pipe from Table 8-7)
- OD = outside diameter of pipe, in. (Table 8-1)
- PS = pipe stiffness, pii (Table 8-1)
- E' = modulus of soil reaction, psi (Table 8-3)

Buckling

Buckling of a pipe wall is a function of the installed condition (M_S) and the pipe wall properties (A, I, and R). In order to demonstrate resistance to buckling, the capacity of the pipe wall (Equation 8-12) must be greater than the yield stress (Fy = 1,440 psi) in order to demonstrate sufficient structural resistance. Further, if the critical buckling stress is less than the yield stress, then the compressive resistance to thrust (Equation 8-9) must be recalculated using F_{cr} instead of F_y.

Equation 8-12
Critical Buckling Stress

$$f_{cr} = 9.24\frac{R}{A_{eff}}\sqrt{B'R_W\phi_S M_S\left(\frac{EI}{0.149R^3}\right)}$$

f_{cr} = critical buckling stress, psi
M_S = secant constrained soil modulus, psi (Table 8-4)
R = effective radius of pipe, in.
= OD/2 - c
OD = outside diameter of pipe, in. (Table 8-1)
c = distance from inside diameter to neutral axis, in. (Table 8-1)
E = modulus of elasticity for polyethylene (Table 8-2)
A = area, in^2/in (Table 8-1)
I = moment of inertia, in^4/in (Table 8-1)
R_w = water buoyancy factor
Where:

$$R_W = 1 - 0.33\frac{H_g}{H}$$

H = burial depth, ft.
H_g = height of groundwater above springline of pipe, ft.
ϕ_s = resistance factor for soil stiffness (Table 8-10)
B' = nonuniform stress distribution factor
Where:

$$B' = \frac{1}{1+4e^{-0.065H}}$$

Bending Strain

LRFD Section 12 design methods requires the bending strain to be evaluated to ensure installed strain levels are within the HDPE material's capability. The bending strain may be computed based on an empirical relationship between strain and deflection as seen in Equation 8-13. It is noted that to account for construction-induced deflections, the AASHTO established permissible construction-induced deflection (Δc) is introduced into the deflection equation. The resultant value (Δ) is the total deflection due to bending. After the resulting value of deflection is determined, bending strain is determined based on Equation 8-14. The AASHTO established bending strain limit is 5%.

Equation 8-13
Pipe Deflection Due to Bending

$$\Delta = \Delta_C D_m - \left(\frac{T_L D_m}{AE\gamma_P}\right)$$

Where:
Δ = deflection of pipe, reduction of vertical diameter due to bending, in.
T_L = factored wall thrust, lb/in
Δ_c = deflection of pipe, construction induced deflection limit 5%
γ_p = load factor, vertical earth pressure, (or f_p = capacity modification factor for pipe from Table 8-9 Table 8-9)
A = wall area, in^2/inch of pipe (Equation 8-1)
E = long-term modulus of elasticity of polyethylene, psi (Table 8-2)
D_m = mean pipe diameter, in.
= OD - 2c
c = distance from inside diameter to neutral axis, in. (Table 8-1)

Equation 8-14
Pipe Deflection Due to Bending

$$\varepsilon_{bu} = \gamma_B D_f\left(\frac{c}{R}\right)\left(\frac{\Delta}{D_m}\right)$$

Where:
ε_{bu} = factored bending strain, in./in.
D_f = shape factor, dimensionless (Table 8-5)
Δ = deflection, in. (Equation 8-14)
γ_B = load factor, combined strain, 1.5
R = effective radius of pipe, in.
= OD/2-c
Where:
OD = outside diameter of pipe, in. (Table 8-1)
c = distance from inside diameter to neutral axis, in. (Table 8-1)
D_m = mean pipe diameter, in.
= OD - 2c

Combined Strain

LRFD Section 12 design methods requires the combined strain (bending plus compression) to be evaluated to ensure installed strain levels are within the HDPE material's capability. The factored compressive strain from Equation 8-15 must be less than or equal to the combined compressive strain determined by Equation 8-16. Additionally, the factored tension strain determined from Equation 8-17 must be less than or equal to the allowable combined tension strain determined from Equation 8-18.

Equation 8-15
Factored Combined Compressive Strain

$$\varepsilon_{cu} = \varepsilon_{bu} + \left(\frac{T_L}{AE}\right)\left(\frac{\gamma_B}{\gamma_P}\right)$$

Where:

ε_{cu} = factored compressive strain, in./in.
ε_{bu} = factored bending strain, in./in. (Equation 8-14)
T_L = factored wall thrust, lb/in (Equation 8-10)
γ_p = load factor, vertical earth pressure (or f_p = capacity modification factor for pipe from Table 8-9)
γ_B = load factor, combined strain, 1.5
A = pipe wall area, in²/inch of pipe (Table 8-1)
E = long-term modulus of elasticity of polyethylene, psi (Table 8-2)

Equation 8-16
Limiting Combined Compressive Strain

$$\varepsilon_{cl} = \left(\frac{1.5 * F_y}{E}\right)$$

Where:

ε_{cl} = limiting combined compressive strain, in./in.
F_y = tensile strength of polyethylene, psi (Table 8-2)
E = modulus of elasticity of polyethylene, psi (Table 8-2)

Equation 8-17
Factored Combined Tension Strain

$$\varepsilon_{tu} = \varepsilon_{bu} - \left(\frac{T_L}{AE}\right)\left(\frac{\gamma_B}{\gamma_P}\right)$$

Where:

ε_{tu} = factored tension strain, in./in.
ε_{bu} = factored bending strain, in./in. (Equation 8-14)
T_L = factored wall thrust, lb/in (Equation 8-10)
γ_p = load factor, vertical earth pressure (or f_p = capacity modification factor for pipe from Table 8-9)
γ_B = load factor, combined strain, 1.5
A = pipe wall area, in²/inch of pipe (Table 8-1)
E = long-term modulus of elasticity of HDPE, psi (Table 8-2)

Equation 8-18
Limiting Combined Tension Strain

$$\varepsilon_{tl} = \gamma_b \varepsilon_t$$

Where:

ε_{tl} = limiting combined tension strain, in/in
γ_B = load factor, combined strain, 1.5
ε_t = allowable tension strain, in/in

8-5 Direct Burial Minimum and Maximum Cover Limitations

The design procedure described in the preceding section is provided for technical completeness and is especially useful for non-standard installations. However, in the case of standard installations, the information in this section is developed to provide a quick reference for maximum and minimum recommended cover heights. Additionally, this section provides a brief explanation of the assumptions used in the development of the burial depths tables.

Minimum Cover in Live Load Applications

Pipe with diameters of 10- to 48-inch installed in trafficked areas (AASHTO H-25 or HS-25 loads) must have at least one foot of cover over the pipe crown, while 54- and 63-inch diameter pipes must have at least 18 inches of cover. The backfill envelope should provide a minimum E' value of 2000 psi. In Table 8-12, this condition is represented by a Class II compacted to 90% standard Proctor density. This minimum cover is measured from the top of the pipe to the bottom of flexible pavement or to the top of rigid pavement.

Additional information that may affect the cover requirements is found in ASTM D2321.

Table 8-12
Minimum Cover for Direct Burial Snap-Tite®
DR 32.5 Pipe with AASHTO H-25 or HS-25 Load

Outside Diameter, OD, in.	Minimum Cover, H, ft.	Outside Diameter, OD, in.	Minimum Cover, H, ft.
10.75"	1'	28"	1'
12.75"	1'	30"	1'
14"	1'	32"	1'
16"	1'	36"	1'
18"	1'	42"	1'
20"	1'	48"	1'
22"	1'	54"	1.5'
24"	1'	63"	1.5'

Note: Minimum covers in this table were calculated assuming Class II backfill material compacted to 90% standard Proctor density and a minimum of 12-inches cover above the crown.

Table 8-13
Temporary Minimum Cover Requirements for Snap-Tite® DR 32.5 Pipe with Light Construction Traffic

Vehicular Load Surface, psi	Minimum Cover, for 10" - 48" diameters, (in)	Minimum Cover, for 54" - 60" diameters, (in)
75	9"	12"
50	6"	9"
25	3"	6"

Maximum Cover

Wall buckling or deflection normally governs the maximum cover a pipe can withstand. The maximum burial depth is predominately influenced by the type of backfill installed around the pipe. Table 8-14 specifies the maximum burial depth for a variety of backfill conditions.

Table 8-14
Maximum Cover for Snap-Tite® DR 32.5 Pipe, ft.

	Class 1		Class 2			Class 3		
Diameter	Compacted (ft)	Uncompacted (ft)	95% (ft)	90% (ft)	85% (ft)	95% (ft)	90% (ft)	85% (ft)
10"	65	10	65	37	10	38	13	8
12"	65	10	65	37	10	38	13	8
14"	65	10	65	37	10	38	13	8
16"	65	10	65	37	10	38	13	8
18"	65	10	65	37	10	38	13	8
20"	65	10	65	37	10	38	13	8
22"	65	10	65	37	10	38	13	8
24"	65	10	65	37	10	38	13	8
28"	65	10	65	37	10	38	13	7
30"	65	10	65	37	10	38	13	7
36"	65	10	65	37	10	38	13	7
42"	65	10	65	36	10	37	13	7
48"	65	10	65	36	10	37	13	7
54"	65	10	65	36	10	37	13	7
63"	65	9	65	36	9	37	12	7

Notes:
1) Calculations assume no hydrostatic pressure and a density of 120 pcf for overburden material.
2) Snap-Tite® may be installed deeper than 65 feet; however, the maximum cover calculations have been truncated at 65 feet for this table.
3) Consult with a Snap-Tite® representative for burial depths deeper than 50 feet.
4) Culverts are typically installed in conditions where ground water is not a problem. If ground water is a concern, contact Snap-Tite® for recommended installed burial depths.

8-6 Rehabilitated Pipe Systems Design Procedure

The design procedure for Snap-Tite® Rehabilitated Pipe Systems (RPS) is complex due to the composite structure nature of the system. This composite structure is typically comprised of a host pipe, Snap-Tite®, and a cementious grout that fills the annular space between the host pipe and Snap-Tite®. In order to accurately predict structural capacity of the RPS, it is necessary to use a combination of traditional engineering analysis and analytical tools such as finite element analysis. The design procedure described evaluates critical failure mechanisms of the Snap-Tite® pipe and the grout filling the annulus between the host pipe and Snap-Tite®.

The existing host pipe or culvert is typically rehabilitated as a result of deterioration or demonstration of structural distress. In order to provide a conservative analysis the structural contribution of the host pipe has not been included in the design procedure.

The RPS design method evaluates the factored resistance and associated factored loading demand placed on the RPS. Specific design criteria evaluated are summarized in Table 8-15.

Maximum and minimum cover height tables have been developed based on the following design procedure.

Table 8-15
RPS Design Criteria

Snap-Tite® Pipe Design Criteria	Grout Design Criteria
Thrust Yielding	Comprehensive Strength
Global Buckling	Tensile Strain
Combined Strain	
Tensile Strain	
Deflection	

CANDE – 2007 Finite Element Analysis Model

The design method for the RPS components, the load factors and the resistance factors are based on the specifications in Chapter 13 of American Association of Highway Transportation Official (AASHTO) Load and Resistance Factor Design (LRFD) Bridge Design Specifications (Reference 2). Recently, AASHTO sponsored the upgrade of CANDE-2007, a finite element computer program developed for the structural design and analysis of buried culverts; hence the acronym CANDE stands for **C**ulvert **AN**alysis and **DE**sign. Since CANDE-2007 was specifically developed for culvert analysis and has the capability to perform AASHTO LRFD analysis, the program is ideally suited for this complex structure analysis.

In order to accurately model the composite RPS system, it is necessary to develop a level three input file for CANDE. This process is initiated by modeling the host pipe and generating a level two mesh for the host pipe plus the backfill. Next, the level two input file is imported into a level three input file. A level three input file simply means that the mesh topography is modified to include the HDPE liner and grout.

While it is not anticipated that a CANDE analysis will be used for each installation, the general modeling assumptions are listed below to provide design guidance.

Beam Elements

The CANDE model for the RPS soil-structure system is composed of a ring of beam elements for the host pipe, a ring of beam elements for Snap-Tite® HDPE liner, a ring of continuum quadrilateral elements for the grout, and two rings frictionless interface elements between the grout and the pipe surfaces. The use of frictionless interface elements was chosen since it is most conservative.

Loading

In the case of dead loads, the system should be modeled for conservative loading conditions. Therefore, an embankment condition is recommended. Additionally, it is recommended that the CANDE analysis simulates the layers of soil loading above 1.5 diameters of cover height. Above that height, 2-psi increments of surface pressure for each load step is applied to the system. All load steps are assigned a load factor of 2.05 representing the product of the standard AASHTO earth load factor 1.95 and the redundancy factor 1.05. These LRFD-factored soil loads are recommended to be placed around and over the RPS in construction increments until the factored weight of the overburden soil causes the onset of structural distress in one of the RPS components.

This new construction method is recommended because the soil around the host pipe remains undisturbed and does not produce earth loads in the liner or the grout. Additionally, this “new construction” method of loading is recommended as a level of conservatism. It is noted that for the maximum burial depth analysis (see Table 9-1) structural distress always turned out to be either the compressive strength of the grout or strain capacity of the grout. In all cases the HDPE component was very safe since it never exceeded 25% of its design capacity. Based on these analyses, DR 32.5 Snap-Tite® is the maximum wall thickness required for structural resistance for RPS.

Host Pipe Analysis

As previously mentioned, the host pipe is typically deteriorated and in some locations may not exist (i.e. invert of metal pipe). Therefore for the maximum burial depth analysis, the material modulus and strength of the host pipe is reduced to 1 psi. This modified host pipe strength does not significantly influence structural response of the system and provides for a conservative analysis.

Output Report

CANDE automatically provides the factored-demand/factored-capacity ratios for the HDPE pipes; however, CANDE does not have a built-in design criterion for the grout. Therefore the output report is analyzed to determine the construction step at which grout loading exceeds its capacity.

The CANDE Output Report is examined to find the first load-step at which the factored-demand to factored-capacity ratio exceeds the value of 1.0 among all the design criteria for the grout and the HDPE liner pipe.

Grout Stress and Strain Analysis

As previously mentioned two critical design criteria for grout are analyzed. The first criterion is compressive strength. The second critical design criterion is tensile strain. Since the grout is confined between the host and liner pipes and the shear bond is modeled as frictionless, these two criteria are considered the most crucial for the grout. Maximum burial depth for each of the criterion is determined and the more limiting of the two analyses dictates the maximum burial depth. It is noted that Snap-Tite® is also checked, but as mentioned Snap-Tite® never exceeds 25% of its capacity in the design.

Grout Compressive Strength

The maximum factored thrust stress or compressive stress in the grout component of the RPS is at the spring line of the system orientated in the vertical direction. CANDE's output report calculates the stress and strain in the vertical direction of each node of which one is located at the spring line. Therefore the CANDE output report is examined at each load step to determine the load step at which the factored thrust at the spring line meets or exceeds the maximum unconfined grout strength. As previously mentioned and shown in Table 8-6, the grout strength is a function of density. The load step is equated to a burial depth and that associated burial depth is established as one possible limit state for the RPS.

Grout Tensile Strain

The maximum factored compressive strain in the grout component of the RPS is at the spring line of the system orientated in the vertical direction. CANDE's output report calculates the factored compressive strain in the vertical direction of each node of which one is located at the spring line. Therefore, the CANDE output report is examined at each load step to determine the compressive strain at the springline. As previously mentioned and shown in Table 8-6, the grout tensile strain capacity is a function of density.

Additionally, CANDE's output report determines the deflection at each load step. Therefore, the CANDE output report is examined at each load step to determine deflection of the RPS. With the compressive strain and deflection determined in the CANDE output report, an empirical relationship (See Equation 8-19) can be used to determine the factored tensile strain in the grout.

Equation 8-19 is used to determine the grout tensile strain based on maximum compressive strain and deflection.

Equation 8-19
Grout Tension Strain

$$\varepsilon_{tg} = D_L \varepsilon_{bg} - \varepsilon_{cg}$$

Where:

ε_{tg} = grout tensile strain, in/in
D_L = liner pipe location factor, unitless
ε_{cg} = compressive strain in grout
= compressive strain from CANDE at springline node for grout, in/in
ε_{bg} = bending strain in grout, in/in

$$\varepsilon_{bg} = \gamma_{bg} D_{fg} \left(\frac{c_g}{R_g} \right) \left(\frac{\Delta}{D_{Mg}} \right)$$

Where:

γ_{bg} = load factor, 1.0
D_{fg} = shape factor of grout, 2.0
c_g = distance to centroid of grout, in
R_g = effective radius of grout, in
Δ = deflection of plastic pipe from CANDE output file, in
D_{Mg} = mean diameter of grout, in

It is noted that the grout is poured in place. Therefore a load factor of 1 and shape factor of 2 is conservative for the design. The location factor essentially doubles the grout strain to account for installed, workmanship and uncertainty.

Chapter 9

RPS Minimum and Maximum Cover Limitations

The design procedure described in Chapter 8 is provided for technical completeness. However, in the case of standard installations, the information in this section is developed to provide a quick reference for maximum and minimum recommended cover heights for most installations. Additionally, this section provides a brief explanation of the assumptions used in the development of the burial depths tables.

Minimum Cover in Live Load Applications

The minimum recommended burial depth for a RPS system is the same as a direct-buried Snap-Tite® pipe, shown in Table 8-12. This minimum cover height is recommended since rutting and other unanticipated field conditions may result in exceeding the RPS system capability.

For construction and short-term traffic loads, the temporary minimum cover for direct burial applications (see Table 8-13) should be used for RPS systems. These minimum cover heights are measured from the top of the pipe to the bottom of flexible pavement or to the top of rigid pavement.

Maximum Cover

Grout compressive strength or grout tensile strain normally governs the maximum cover a RPS system can withstand. The maximum burial depth is predominately influenced by the type of backfill installed around the pipe. Table 9-1 specifies the maximum burial depth for a variety of backfill conditions. Table 9-1 should be used for a guideline to determine required densities and maximum burial depths. Contact Snap-Tite® for special applications.

Table 9-1
Maximum Burial Depth for RPS (ft.)

Host Pipe Diameter (Inches)	Snap-Tite® Diameter (Inches)	75 lb/ft³ Grout		55 lb/ft³ Grout		40 lb/ft³ Grout	
		Good Soil	Poor Soil	Good Soil	Poor Soil	Good Soil	Poor Soil
12	10.75	93	37	90	30	42	28
15	12.75	76	43	67	31	50	21
18	14	81	64	57	40	40	24
18	16	89	38	91	31	45	26
24	18	89	36	61	48	38	24
24	20	73	46	61	32	38	20
30	24	75	52	56	37	42	26
30	26	78	44	73	32	47	25
36	32	83	39	78	30	44	23
42	36	75	36	67	27	48	19
48	42	83	39	78	30	44	23
54	48	90	45	86	23	42	23
60	54	134	48	82	43	41	36
72	63	95	42	92	35	42	25

Notes:
1) Good soil refers to a backfill material with a soil modulus of 3,000 psi or greater.
2) Poor soil refers to a backfill material with a soil modulus of 1,000-3,000 psi.
3) All burial depth units are measured in feet from the crown of the pipe to the finished grade elevation.

Chapter 10
Thread-Liner

The Thread-Liner piping system

It's a fast install, it handles the job's requirements, and it fits your budget as easily as it fits into the available work space.

No special training or equipment.

The Thread-Liner pipe lining system is unmatched in ease of installation. Since it typically weighs as little as 10% of concrete, ductile iron and clay pipes, it is much easier to handle. Maintenance departments can use their own crews - no special training or specialized equipment necessary.

You don't have to wait on the backhoe.

Because of Thread-Liner's ease of installation and variable lengths, 95% of drainage and sewer pipe renewal can be off road. This means increased safety for both your workers and motorists. Traffic disturbance can be a thing of the past.

Everything for the installer.

Standard Thread-Liner comes in a diameter range of 3" to 42", and a standard length of 30"(2.5 feet lay length). Additional diameters and custom lengths may be available upon request. Typically, it comes in 2- to 3-foot sections for manhole-to-manhole installation. These sections can be connected together, all with strong water-tight seals. These advantages also make Thread-Liner the preferred answer for pipe renewal.

Simple installation means light duty equipment, less manpower, minimal disturbance of right-of-way, and indefinite service life. When considering these benefits, it becomes clear that the Thread-Liner system is the most cost-effective way to rehabilitate deteriorating drainage piping systems. It may be the last solution you'll ever need.

The Thread-Liner joint and installation system allows replacement of failing systems without the need to remove existing pipe or excavation.

Thread-Liner

Thread-Liner Applications

Thread-Liner is a new, leak-free, independent system that features cost-effective installation, improved flow, and dramatically longer life. High-density polyethylene has outstanding chemical and corrosion resistance. It also has high strength and flexibility. Compared to pipe replacement, one can save up to 50% with the following benefits:

- No interruption of sevices
- Little or no surface damage
- Maintain traffic flow
- Faster project comption
- Improved aydraulic capacity
- The sealed system prevents entry of ground water, roots, and debris
- A long service life
- Reduced extraneous water allows treatment plants to operrate efficiently and owners benefit from lowered volues for waste treament.

Typical applications for Thread-Liner are sanitary sewer relining, industrial sewer relining, culvert relining and dam rehabilitation.

Benefits of Using the Thread-Liner Pipe Rehabilitation System

Special threaded sections of polyethylene pipe are inserted into the old sewer, forming one continuous, leak-free liner.

Once anchored and sealed by grouting, the new system is virtually maintenance-free. There is no excavation or costly restoration, no traffic diversions, no interruption to service, better flow and chemical resistance and elimination of infiltration and exfiltration problems.

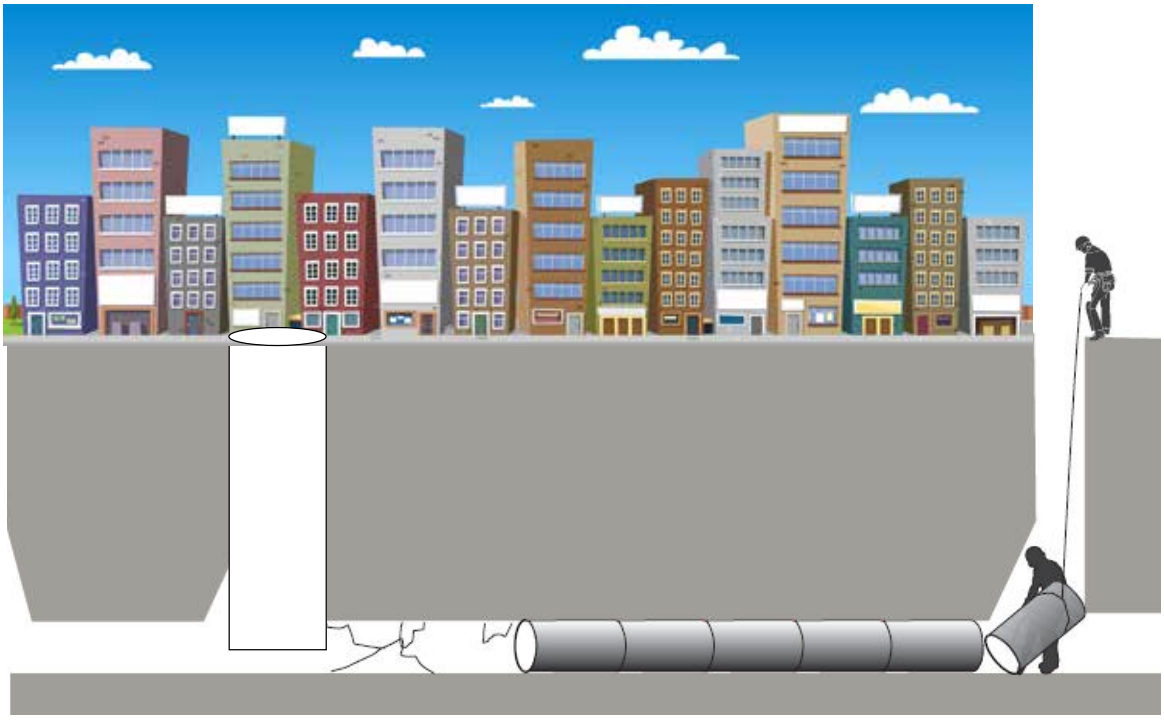

The Thread-Liner joint and installation system allows replacement of failing systems without the need to remove existing pipe or excavation.

Chapter 11

ISCO Aquatic Life Passage

ISCO A.L.P (Aquatic Life Passage)

For many years fish and other aquatic organisms have migrated through culverts made with corrugated metal pipe (CMP). Installed as many as 50 years ago, numerous CMP culverts are so significantly rusted and near failure that water and fish have trouble effectively getting from one end to the other. A "fish-friendly" solution to these failing culverts that is economically feasible, quickly installed and non-disruptive to the motoring public is imperative. Relining these culverts has always been a possible and popular solution. However, most high density polyethylene (HDPE) pipes have a smooth interior wall. The smooth wall has an extremely low resistance to flow, consequently increasing water velocity and making it difficult for fish and other aquatic organisms to pass through.

Snap-Tite® now offers an interior open profiled HDPE pipe designed to enhance aquatic life passage. ISCO A.L.P.'s internal structure is comparable to that of CMP, but manufactured with a more durable material. Fish and other aquatic organisms can now migrate more easily through their physical environment but with a pipe constructed of HDPE, offering a much longer service life. The interior profiles act as "roughness elements" that decrease the flow velocity and allow for some silt and stream bed material to collect inside.

Additionally, Snap-Tite® can install available baffles to solve depth and velocity problems within a culvert during flow extremes. In low-flow situations, most baffles act as weirs to create small pools of standing water. As the flow increases, the water rises up over the baffles. The baffles help decrease flow velocity while creating resting areas for fish to use during high velocity water flow occurrences.

Table 11-1
ISCO A.L.P. Size Range

Nominal Pipe Diameter (Internal) Inches	Ring Stiffness Classifications RSC	Profile Type	Pipe OD Inches	Estimated Lbs./pipe
24	100	A.L.P.	28.72	366
	160	A.L.P.	28.72	366
30	100	A.L.P.	34.72	446
	160	A.L.P.	34.72	446
36	100	A.L.P.	40.72	526
	160	A.L.P.	40.72	526
42	100	A.L.P.	46.72	606
	160	A.L.P.	46.96	771
48	100	A.L.P.	52.96	738
	160	A.L.P.	53.12	995
54	100	A.L.P.	58.96	975
	160	A.L.P.	59.20	1309
60	100	A.L.P.	65.12	1227
	160	A.L.P.	65.35	1616
66	100	A.L.P.	71.75	1415
	160	A.L.P.	71.75	1996
72	100	A.L.P.	77.75	1719
	160	A.L.P.	77.75	2412
84	100	A.L.P.	89.75	2419
	160	A.L.P.	90.22	3530
96	100	A.L.P.	101.91	3383

** Typical values. Actual values may differ. Additional sizes available.*

More and more culverts are being accessed as a crossing by fish and other aquatic organisms; however, most culverts are not fully passable. For a fish, on an upstream migration, to successfully negotiate a culvert, it must enter the culvert barrel, traverse the barrel length, exit at the upstream end and proceed to the first resting area. As such, many states are implementing recommendations and guidelines for improving the effectiveness and ecological impact for waterway crossings. Experts tend to agree that the most effective solution for creating unobstructed fish passages is to replace problem culverts with new crossing structures such as bridges or oversized and/or embedded culverts that are able to simulate a natural streambed bottom.

However, many agencies have concluded that due to the number existing culverts and the limited amount of public funds available, it is unlikely and/or impractical that every culvert that impairs fish passage will be removed and replaced with an adequate design. In situations where replacements are not practical or sensible, retrofitting a culvert with baffles may be a reasonable measure to provide some passage improvements. Culvert retrofits are modifications to an existing culvert and/or stream channel in an attempt to reduce barriers and improve fish passage. Baffle retrofits are not considered by many to be long-term solutions, but rather are viewed as a temporary solution until replacement can be logistically and financially viable.

For many years, Snap-Tite® has made its mark as an excellent option for rehabilitating culverts that are failing structurally, where replacement would be costly, untimely, and very disruptive to the surroundings. Snap-Tite® with factory installed baffles can become a culvert retrofit option that provides the same construction advantages and cost saving benefits, while also providing improvements for aquatic passage.

Most culverts with fish passage problems were designed with a focus on the culvert diameter required to pass a highflow event. As a result they are undersized because they were designed for stream flow only, without regard to velocity impact on fish passage and other aquatic organisms.

Corner Baffle Design

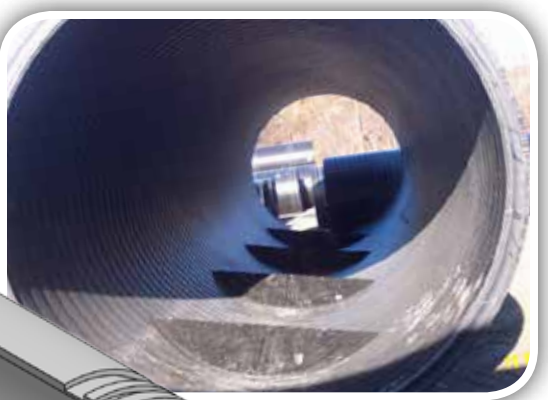

Baffles are placed off center from the invert or flowline of the culvert and remain on one side of the culvert and do not alternate.

About Bafles

Baffles are used to solve depth and velocity problems within a culvert during flow extremes. In low-flow situations, most baffles act like weirs to create small pools of standing water. As the flow increases, the water rises up on the baffle and the baffles act as roughness elements that decrease the flow velocity, creating resting areas for fish to escape high velocity water streaming through the culvert. Again, it should be noted that baffles are not recommended by leading research organizations for new installations or situations that demand complete replacement of culverts where fish passage is of concern.

When adding baffles to a retrofitted culvert, the culvert now becomes more prone to become blocked or clogged. It is imperative that a regular inspection and maintenance program is developed, otherwise the crossing has exchanged one fish passage problem with another. Inspections and maintenance are typically important during and immediately after high flow events, especially as fish migration occurs in these events. Baffles (and culvert retrofits) are considered part of the hydraulic design option for design methods used in fish passage analysis. Baffles are typically recommended for culverts with a maximum slope of 2.5%-3.5%. (Corner baffles are typically used for slopes less than 2.5% while notched weir baffles are used between 2.5 %and 3.5%.) It is acknowledged that while the goal is to optimize culvert capacity, limit sediment deposition and debris accumulation, limit maximum velocity and maximum turbulence; each criterion will have to be balanced against each of the others for a compromise in the overall design. Culvert retrofits are not expected to be able to satisfy all the requirements of the hydraulic design option. The retrofit design should also be analyzed in conjunction with inlet and outlet control features such as tailwater control measures. The design engineer should consider and evaluate these conditions when specifiying the baffle criterium to Snap-Tite® for fabrication.

Notched Weir Baffle

The notched weir baffle design and corner baffle designs are recognized by the Federal Highway Administration along with many state transportation and environmental agencies.

Is Erosion Control a Problem?

Erosion control is a major concern when rehabbing an existing culvert. Snap-Tite® is your no-dig solution to lining failing culverts, and your answer to erosion control challenges. Not only does Snap-Tite® rehab the culvert, it provides erosion control for the areas surrounding the culvert and maintains a constant elevation, thus making it easier for fish to enter the culvert. Snap-Tite® pipe is made from HDPE pipe, which can be made to fit all of your culvert needs.

Pools adjcent to culvert can play important design elements in ISCO A.L.P.

Ponding effect created by baffle/weir design during low-flow.

Chapter 12
Handling and Storage

Unloading Site/Storage

A suitable unloading site will be generally level and large enough for the carrier's truck, handling equipment and its movement, and for temporary load storage. General requirements for long-term storage are for the area to be of sufficient size to accommodate piping components, to allow room for handling equipment to get around them, and to have a relatively smooth, level surface where the pipe is protected from large angular stones, debris, or other material that could damage pipe or components, or interfere with handling. For some projects, several storage or staging sites along the right-of-way may be appropriate, while a single storage location may be suitable for another job. The site and its layout should provide protection against physical damage to components. Storage location should provide protection from flooding, or materials should be restrained or confined to prevent unwanted travel of the pipe should a flooding event occur.

Pipe may be placed on 4-inch wide wooden dunnage or similar as shown in Detail 12-1. Middle support(s)/dunnage board(s) are not always required but may be useful as pipe diameters get smaller or as lengths increase. The boards are used to maintain clearance for forklift forks or lifting slings.

Supports for the pipe should be a minimum distance of 3' away from each end. Supports that are closer to the ends increase the stress at the Snap-Tite® male and female ends and can cause a crack to develop when the loading becomes excessive. Care should be taken to ensure:

- No direct impacts occur.
- No Dropping the ends on the ground.
- No resting against other surfaces as that can create the same stress event.
- Ensure that the mating landings.
- Machined ends are not damaged to help ensure a proper snap and seal during pipe segment joining.

Detail 12-1:
Stacking Detail

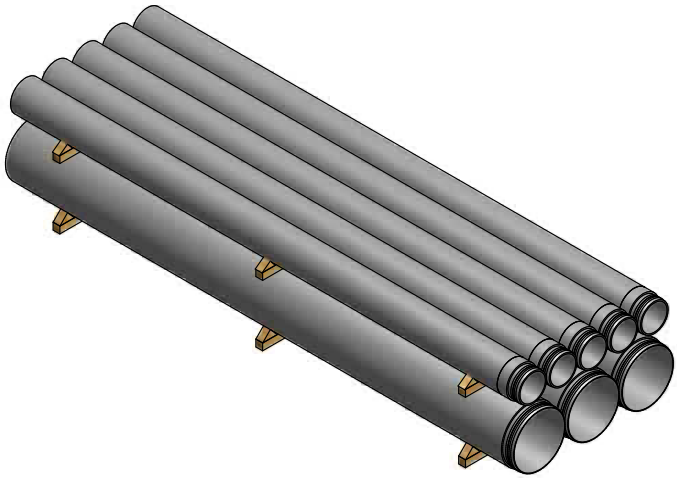

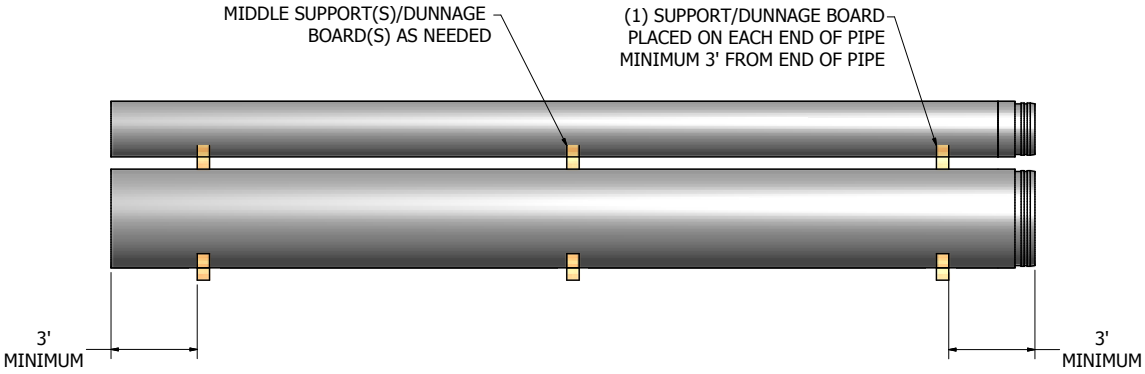

Storage Height Limits

Pipe received in strapped bundles or strip load packs should be stored in the same package. If the storage site is flat and level, bundles or strip load packs may be stacked evenly upon each other to an overall height of about 5'. For less flat or less level terrain, limit the stacking height to about 3'. Before removing individual pipe lengths from bulk packs or strip load packs, the pack must be removed from the storage stack, and placed on the ground.

Individual pipes may be stacked in rows. Pipes should be laid straight, not crossing over or entangled with each other. The base row must be blocked to prevent sideways movement or shifting. The interior of stored pipe should be kept free of debris and other foreign matter.

Unloading Pipe, Fittings and Special Fabrications

Non-bundled pipe and non-palletized fittings and special fabrications can be unloaded from above with suitable lifting equipment and wide fabric slings/chokers, or from the side with a forklift. *Pipe, fittings, and special fabrications must not be pushed or rolled or dumped off the truck, or dropped.*

Unloading and handling equipment must be appropriate for the type of packaging, must be in safe operating condition, and must have sufficient capacity (load rating) to safely lift and move the product as packaged. Unmanned equipment should be shut down or isolated from movement when not directly in use. Equipment operators should be trained, and preferably, certified to operate the equipment. Safe handling and operating procedures must be observed. At no time should an individual stand beneath a suspended load or directly down hill from a suspended load. Personnel who are not actively involved in the material handling process should not be in the loading and unloading area. *Special attention while strapping and unstrapping loads is advised, and all personnel must be vigilant for sliding and rolling pipes while near trucks and lifting equipment.*

PE piping product transportation and handling is generally subject to governmental safety regulations such as OSHA in the United States or CCOSH in Canada. Persons transporting and handling HDPE piping products should be familiar with applicable governmental safety regulations. Additional HDPE pipe handling and transportation information is available in the Material Handling Guide from the Plastic Pipe Institute (www.plasticpipe.org). The responsibility for safe transport and handling; however, rests primarily with persons that actually perform transport and handling activities.

Although PE piping components are lightweight compared to similar components made of metal, concrete, clay, or other materials, larger components can be heavy. Lifting and handling equipment must have adequate rated capacity to safely lift and move components. Equipment that lifts from the bottom of the load such as a forklift, or from above the load, such as a crane, a side boom tractor, or an extension boom crane, is used for unloading. Above the load lifting equipment may employ slings, or slings and spreader bars, to lift the load.

Lifting Equipment

When using a forklift or forklift attachments on equipment such as articulated loaders or bucket loaders, lifting capacity must be adequate at the load center on the forks. Forklift equipment is rated for a maximum lifting capacity at a distance from the back of the forks. If the weight-center of the load is farther out on the forks, lifting capacity is reduced.

Before lifting or transporting the load, forks should be spread as wide apart as practical, forks should extend completely under the load using fork extensions if necessary, and the load should be as far back on the forks as possible. During transport, a load on forks that are too short or too close together, or a load too far out on the forks, may become unstable and pitch forward or to the side, and result in damage to the load or property, or hazards to people.

Wide fabric choker slings that are secured around the load or to lifting lugs on the component should be hooked above the load lifting equiment, i.e. cranes, extension boom cranes, and side boom tractors.Wire rope slings and chains can damage components, can slip, and should not be used. Spreader bars should be used when lifting pipe or components longer than 20'. Overhead utilities or obstructions must be avoided during the material handling process. *Before use, inspect slings and lifting equipment. Equipment with wear or damage that impairs function or load capacity should not be used.*

Receiving Report & Reporting Damage

The delivering truck driver will ask the person receiving the shipment to sign the Bill of Lading, and acknowledge that the load was received in good condition. Any damage, missing packages, etc. should be noted on the Bill of Lading at that time. Shipping problems such as damage, missing packages, document discrepancies, incorrect product, etc. should be reported immediately. Shipping claims must be filed within 7 days or as Standard ISCO Terms and Conditions dictate (included at the end of this guide).

Environmental: Exposure to UV and Cold Weather

PE pipe products are protected against deterioration from exposure to ultraviolet light and weathering effects with antioxidants, along with thermal and UV stabilizers. Black HDPE pipe and fittings contain at least 2% carbon black to limit the effects of UV attack. Black HDPE pipe and fittings are suitable for outdoor storage without covering or protection against UV exposure. Products that are improperly stored for many years may be affected by other environmental conditions, or be subject to obsolescence due to improvements in materials or processes.

Temperatures near or below freezing will affect PE pipe by increasing stiffness and reducing resistance to impact damage. PE remains ductile at temperatures below -40°F (-40°C). In colder conditions, allow more time to conduct handling and installation procedures that bend and flex the pipe. Extra care should be taken not to drop pipe or special fabrications, and to keep handling equipment and other things from forcefully impacting the pipe.

Ice, snow, and rain are not harmful to the material, but unsure footing and traction require greater care and caution to prevent damage or injury. Inclement weather can make pipe surfaces especially slippery. Do not walk on pipe.

Damage Inspections

Damage such as cuts, scrapes, gouges, tears, cracks, punctures, and the like may occur during handling and installation. Excessive damage could compromise pipeline performance. In many markets where pipelines are under pressure, the industry standard for HDPE pipelines is that damage should not exceed about 10% of the minimum wall thickness required for the pipeline's operating pressure or the minimum wall thickness required to meet structural design requirements.

If damage is not excessive, the shape of the damage may be a consideration. Sharp notches and cuts may be dressed smooth so the notch is blunted. Blunt scrapes or gouges should not require attention. Minor surface abrasion from sliding on the ground or insertion into a casing should not be of concern.

In gravity flow and low-pressure head applications like a Snap-Tite® culvert liner, excessive damage like deep gouges, cuts or grooves may be evaluated based on site specific criteria. Deeper gouges that do not penetrate to the pipe ID and are expected to be contained within the annulus grout may be considered acceptable, since the liner is carrying little if no structural load (refer to chapter 8). Excessively deep cuts, abrasions, grooves, punctures or tears may be repaired by using extrusion welding to fill the damaged area with HDPE material.

* Chapter Information courtesy of Plastics Pipe Institute.

Chapter 13
Specifications

Material Requirement

These specifications cover the purchase of high density polyethylene (HDPE) pipe liners for lining existing culvert pipes. Pipe liners furnished to this specification shall meet or exceed all requirements.

Bidders are cautioned to read the specifications carefully, as there may be special requirements not commonly offered by the pipe liner manufacturer.

Pipe liner shall meet the following requirements and conform to the reference specifications:

The liner pipe shall be made of high density polyethylene resins in accordance with the requirements of ASTM D3350. The Cell Classification will be a minimum 345464C and shall have the Plastic Pipe Institute designation of PE3608.

Pipe liner shall be a Dimension Ratio (DR) of 32.5. The installed pipe shall have a smooth, non-corrugated interior and exterior surface.

The liner shall be capable of being joined into a continuous length by an interlocking method. The joints shall not create an increase in the outside diameter of the liner pipe to eliminate any coupling difficulties. The joints must be water-tight with gaskets that are capable of handling pressures up to 25 feet of head per ASTM D3212. Each HDPE shall have a male and a female end. The supplier shall furnish a manufacturer's certification stating that the material in the pipe meets the requirements of ASTM D3350 with a minimum cell classification of PE345464 C with the physical properties indicated above.

The supplier shall certify the dimensions meet the requirements of ASTM F714.

Before inserting the liner pipe, the existing pipe must be cleaned if needed. All debris or other materials must be removed from the host pipe.

After the liner is in place, the area between the original pipe and the liner shall be completely filled with low density flowable fill or cellular grout.

SAMPLE SPECIFICATION

Sample Specifications for Snap-Tite® Culvert Liners

This Specification is available at www.culvert-rehab.com in a downloadable word format form for this format and CSI format. A grout specification is also available at www.culvert-rehab.com in a downloadable CSI word format.

1. **Description** — This Item shall govern for furnishing, installing, grouting and providing all labor, material and equipment necessary to rehabilitate existing culvert pipe by sliplining an existing culvert pipe with high density polyethylene (HDPE) pipe. The pipes shall be sizes, types, designs and dimensions shown on the plans and shall include all connections, joints and other appurtenances as required to complete the work.

   The sliplining process will require the contractor to completely grout the annular void between the host and insert pipe. The grouting process shall be considered subsidiary to this item.

2. **Materials** — Unless otherwise specified on the plans or herein, culvert pipe renewal shall conform to the following:

   Snap-Tite® Culvert Liner as provided by ISCO Industries or approved equal.

   A. Liner Material – High Density Polyethylene (HDPE) Pipe

   1. High density polyethylene pipe and fittings shall meet the requirements in the AASHTO M326-08 Specification.

      a. 3rd Party Test Data must be submitted at time of bid. Test Data must also be verified by an approved PE for accuracy.

   2. Raw Materials. The pipes and the fittings shall be manufactured from PE resin compounds, which have a minimum cell class 345464C as defined and described in ASTM D3350.

   3. HDPE Resin Specifications.

Property	Specifications	Unit	Nominal Value
Material Designation	**PPI/ASTM**		**PE3408/PE3608**
Cell Classification	ASTM D3350		345464C
1. Density (3)	ASTM D1505	Gm/cm^3	0.955
2. Melt Index (4)	ASTM D1238	gm/10 min.	0.11
3. Flexural Modulus (5)	ASTM D790	psi	135,000
4. Tensile Strength (4)	ASTM D638	psi	3,200
5. Slow Crack Growth			
a. ESCR	ASTM D1693	hours in 100% igepal	>5,000
b. PENT (6)	ASTM F1473	hours	>100
6. HDB @ 73 deg. F (4)	ASTM D2837	psi	1,600
7. UV Stabilizer (C)	ASTM D1603	%C	2.5%

   B. Designation of Type

   1. The HDPE pipes used for liners in gravity flow culverts shall be solid-wall construction with mechanical end connectors, male and female, consisting of 2 machined-groove landing points, to prevent the pipe from pulling apart during installation.

   2. Individual liner section lengths shall be a minimum of 6 ft. but shall not exceed 50 ft. unless pre-approved.

C. **Pipe joints** shall comply with ASTM D3212 Standard Specification for joint tightness.

1. Extrusion welded joints shall not be allowed to join the liner pipe together to keep grout from leaking out during the grouting stage.
2. Neoprene Cement shall not be allowed to create a seal at the joint to prevent grout from leaking out during the grouting stage.

D. **Hydraulic flow characteristics** for the liner pipe shall provide a Manning's coefficient of n = 0.00914. Pipe Manufacturer shall submit 3rd party test data verifying the Manning's coefficient has been achieved.

E. **Liner Pipe** material must be pre-approved by the governing state agency's materials testing department before bid and have a minimum of 1,000' of said liner installed in said state.

F. **Oval Pipe**

1. The liner shall be furnished in an oval shape to match the existing CMP elliptical pipe, with horizontal and vertical wood struts inserted through the liner by the manufacturer before delivery to the jobsite, as to keep the liner in an oval shape before grouting into place. After the liner has been grouted fully in place, the struts shall be removed. The Contractor is responsible for ascertaining actual measurements prior to ordering the liner.

G. **Other pipe liners** that do not meet this specification must be submitted for approval prior to bid date.

H. **Liner Pipe must be manufactured in the United States under the 'Buy American Products' program**

I. **Grouting Material** – Contractor shall utilize material specifications for solidification of the annular void between host and the inserted liner with low-density flowable fill or cellular grout. The cellular grout with a density between 40 and 80 lbs. per cubic foot may be used. Reduced-density flowable fill grout with a density between 100 and 120 lbs. per cubic foot may be used.

J. **End Treatment** – The upstream/inlet end of the new liner pipe shall be fitted with a flow enhancement device to reduce inlet control effects. The device shall be HDPE material, same as the liner pipe, and have a connector included for connection to the liner pipe. The opening at the end of the device shall be larger than the ID of the host pipe. 3rd Party Test data shall be provided to show improvement of flow by at least 30% at 2 feet of headwater depth or an entrance loss coefficient (K) of approximately 0.2 for outlet control conditions. The device shall be the Hydro-Bell or approved equal.

3. **Cleaning** — The existing culvert pipe shall be cleaned by whatever means necessary to remove all obstructions which may be encountered that would prevent insertion of the pipe liner into the host pipe as approved by the engineer. This work will not be paid for directly, but shall be considered subsidiary to this item.

4. **Construction**

A. **Installation**

a. Contractor must be pre-approved by the pipe manufacturer and a letter of this pre-approval must be submitted from the manufacturer to the contractor at the time of bid.
b. Contractor personnel shall have a minimum of 5,000' of slipline material installation experience and submit three previous slipline project references similar in size and scope of bid in writing.

c. Manufacturer's Rep must be on site at critical stages of the liner installation and grouting application.

B. Liner Pipe – Liner pipe shall be inserted and installed in accordance with manufacturer's recommendations. Grade of liner pipe shall be maintained parallel to grade of host pipe.

C. Grouting

a. Upon completion or partial completion of the sliplining process, grouting will be required to be placed in the annular void between the insertion pipe and the host pipe. Cellular grout with a density between 40 and 80 lbs. per cubic foot may be used. Reduced-density flowable fill grout with a density between 80 and 120 lbs. per cubic foot may be used. Project engineer shall state density of grout to be used on drawings or in specifications.
b. A detailed plan on holding the liner pipe on the invert of the host pipe shall be submitted to the engineer for approval.
c. The annular void shall be completely grout filled without deflecting the insertion pipe greater than 1.5 percent.
d. The contractor shall provide end seals at the open points of each run of pipe to be grouted.
e. Penetration of the host pipe shall be permitted for host pipe constructed with Corrugated Metal Pipe (CMP) to facilitate grouting of the annular void. Multiple fill pipes will be required.
f. The annular void shall be grouted solid by injecting grout from one end of the pipe run and allowing it to flow toward the other end. Venting of the annular void shall be performed to assure uniform filling of the void space during the grouting process.
g. An open-ended, high-point tap or equivalent vent must be provided and monitored at the bulkhead opposite to the point of grouting.
h. Pressure on the annular void shall not exceed 2 PSI to avoid damage to the liner pipe. Regardless of the pressure, the contractor shall be solely responsible for any damage or distortion to the insertion pipe due to the grouting process.
i. The grout shall be made using the preformed foam process using foam-generating equipment calibrated daily by the foam manufacturer to produce a precise and predictable volume of foam. The foam concentrate shall be certified by the customer to have specific liquid/foam expansion ratio at a constant dilution ratio with water.
j. The specific job mix shall be submitted to the customer by either the foam concentrate supplier or the certified /licensed contractor for approval prior to use on this project. The mix shall have a minimum 28 day compressive strength of 300 psi.
k. Grout mixed off-site shall be delivered to the jobsite in a truck mixer filled to half its capacity. The foam concentrate shall then be added to the cement mix in the truck and mixed to a uniform consistency and pumped into the annular space.
l. Contractor must have a written erosion control plan with a method for waste grout recovery submitted to county with attached bid proposal.
m. Customer will verify that post-construction conditions are acceptable after installation and ensure that proper seeding and general cleanup has been completed.

D. Pipe Stockpiling and Handling – Pipe and fittings shall be stockpiled in a safe manner at each contractor staging area or pit location. The stockpiling shall be arranged to cause a minimum of interference to pedestrian and stored outside the safety clear zone of vehicular traffic. When handling sliplining pipe, the contractor shall take all precautions necessary to avoid damaging the pipe. For pipe with cuts greater than 10% of the wall thickness, repair or replacement will be at the entire expense of the contractor.

5. **Clean-up and Restoration** — Upon acceptance of the installation work and testing, the contractor shall clean-up and restore the project area affected by operations as approved by the engineer.

6. **Measurement** — This item shall be measured by the foot. Such measurement shall be made along the flowline of the liner pipe, complete in place.

   For multiple culverts to be lined, the measurement length shall be the sum of the lengths of each barrel, measured as prescribed above.

   The accepted quantities of pipe liner will be paid for at the contract unit price per linear foot for the size of the existing pipe in which the liner is installed, complete in place.

7. **Payment** — The work performed and the materials furnished in accordance with this Item and measured as provided under "Measurement" will be paid for as the unit bid for "Sliplining Culvert Pipe" of the type, design (if required), and size specified. This price shall be full compensation for cleaning existing pipe; for furnishing, hauling, installing liner pipe and placing grout; for all connections; and for all labor, tools equipment, materials, clean-up and incidentals.

Chapter 14

Frequently Asked Questions

Frequently Asked Questions (FAQ)

1. What is ready-mixed concrete?

Concrete is a mixture of aggregates and paste. The aggregates are coarse aggregates (gravel or rock) and fine aggregates (sand); the paste is water and cement. Cement is a fine, gray-colored powder.

Concrete is usually produced at a Ready-Mix Concrete Batch Plant and delivered to the site in a concrete truck, thus the name “ready-mix” or “ready-mixed” concrete.

2. Are cement and concrete the same?

No; although the terms cement and concrete are often used interchangeably, cement is actually an ingredient of concrete. Cement is a binder, a substance that, when mixed with water, sets and hardens. It can bind other materials together.

So, there is no such thing as a cement sidewalk or a cement mixer; the proper terms are concrete sidewalk and concrete mixer.

3. What is concrete slump?

Slump is a measure of the consistency of concrete, or the ability of the concrete to flow. A slump cone is filled with the plastic (wet) concrete and the cone is lifted up. The amount that the cone of concrete ‘slumps’ away from its original height is the concrete slump value.

A low slump indicates a stiff mix; a high slump value means the concrete is more fluid. The cone is 12" high so the slump range is zero to twelve inches. A typical slump range for ready-mixed concrete is 3 to 5 inches.

4. When asked what slump to use for grouting the annular space around Snap-Tite® what do you answer?

Slump is a term to describe the consistency of concrete; it is not used to describe the grout. A measurement used for the consistency of grout is the **flow value**.

The flow value of grout is determined by filling a cylindrical cone with the material and measuring the time it takes for the grout to flow out of the cone. A range of 20-30 seconds is typical. The more liquid the grout, the faster it flows out of the cone and the lower the flow value. This value is not typically taken during culvert rehabilitation projects.

A slump value can be used for the concrete to be placed in the bulkhead. In that case, a low slump of 1" to 2" is appropriate.

5. What is density?

Density is the unit weight of a material; it is measured in pounds per cubic foot. It is the weight of the amount of material it would take to fill a container measuring 1 ft. x 1 ft. x 1 ft.

For reference, here are the densities of common materials

Water	62.4 lbs/cubic foot
Low-density cellular grout	30 to 60 lbs/cubic foot
Normal Concrete	140-150 lbs/cubic foot
Sand	90-100 lbs/cubic foot
Crushed stone	120-130 lbs/cubic foot

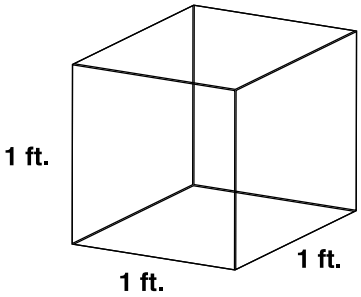

6. **How is density related to strength?**

For grout mixes, the higher the density, the higher the compressive strength of the material. A grout mix used to fill annular space does not need a high compressive strength, but needs to be as strong as the soil it is replacing.

Soil is placed around a pipe in new construction or during a "Dig & Replace" operation. The soil is compacted to a certain density; usually 95% of the soil's Standard Proctor value. The compressive strength of the soil is not required.

The same is true for grout mixes that are used to fill annular space in a sliplining operation. The density of the grout (lbs./cu.ft.) is the important value, not the strength (psi).

Grout mixes with higher densities may have sand included, have more cement in the mix, or not have as much foaming agent added to it as a grout mix with a lower density.

7. **What grout strength should be used with Snap-Tite®?**

The grout should be as strong as the soil around the pipe. For reference, the support strength of different types of soils and grout materials are listed here:

Material	Support Strength, (psi)
Sand, (90-100 lbs./cu. ft.)	7 psi
Sand and clay	25 psi
Gravel and clay	14 psi
Crushed stone	21 psi
Cellular grout, 70 lbs./cu. ft.	300 psi
Cellular grout, 35 lbs./cu. ft.	80 psi

8. **The installer called and wants to use an "8 bag" or "8 sack" mix. Will it work?**

This is a term related to concrete. You will have to question the installer further as to how he plans to use this material. If he is using the concrete for the bulkhead, then an "8 bag" mix is a very strong mix for this task.

If he wants to use the material to grout the annular space, then the installer must be educated about using a grout mix instead of a concrete mix for this chore.

What is an "8 bag" mix? This means that 8 bags of cement will be used per cubic yard of concrete. At 92 lbs per sack, this equates to 736 lbs of cement put into each yard of concrete batched.

Depending on the specifics of the sliplining project (ex: what size Snap-Tite® is going into what size host pipe, how long is the pipe run, etc.), a range of concrete mix designs, from a "3 sack" mix to an "8 sack" mix, can work. The important value to communicate to the concrete batch plant is that the mix must have a low slump value, 1" to 2". You don't want the concrete for the bulkhead to 'flow' too much.

Since there is a minimal volume of concrete needed to form the bulkhead, this is not a major cost component of the job. Having more cement in the mix is better than having too little. It is important that the bulkhead be strong enough to withstand the pressure exerted on it from the grout placed inside.

This information is available on the web at www.Culvert-Rehab.com. You can call (800)-culvert for any questions about cellular grouts.

9. Why do I need to grout the annular space?

When we slipline a culvert with Snap-Tite®, we direct the flow of water through the Snap-Tite® Liner. Grouting supports the Snap-Tite liner within the pipe. It also fills voids in the soil around the host pipe. These voids are formed when the bedding soil of the pipe infiltrates through holes in corroded metal pipe or through joints that have pulled apart with concrete pipe. Thus, grouting the annular space serves both processes which are needed to maintain the roadway long term. See rehab video on website.

There are certain situations where grouting the annular space is not needed. If there is a small annular space, say a 20" Snap-Tite® pipe is inserted into 24" RCP, then forming concrete end walls on the inlet and outlet side may be all that is required. The concrete is not going to continue to corrode as a corrugated metal pipe may and the water is forced through the polyethylene Snap-Tite® pipe so further soil infiltration is prevented.

10. How do you determine the liner size?

The rule of thumb is to use a liner that is 10% smaller than the ID of the original pipe. When lining concrete pipes, this will result in 80 to 100 percent of flow. When CMP is sliplined, flow is usually increased.

Chapter 15
Glossary of Terms

Glossary of Terms

(Specific for Snap-Tite® Applications)

Admixtures (Ad Mix)
Admixtures are materials other than cement, aggregate and water that are added to concrete either before or during its mixing to alter its properties, such as workability, curing temperature range, set time or color.

Annular Space (Annulus)
The gap between the inside diameter of the host pipe and the outside diameter of Snap-Tite® or other sliplined pipe material. Annular space is typically measured in inches. This space can be calculated as the volume of a cylinder.

Apron
Protective material placed on a streambed to resist scour.

Backfill
Material used to refill a ditch or other excavation, or the process of doing so.

Barrels
The number of parallel pipe runs through an embankment or under a road.

Barrel diameter
The internal diameter of a pipe or culvert.

Blocking
The use of blocks of wood or other materials on the top or side of a liner pipe to maintain grade and alignment of Snap-Tite® or other sliplined pipe in the annular space. Blocking may be used as a temporary fixture to maintain grade and alignment during the grouting process or as a permanent fixture.

Blocks
Pieces of wood or other materials used to maintain grade and alignment when attached to the top or side of a liner pipe.

Bulkhead
Vertical, or near vertical, wall that supports a bank or an embankment; also seal between host pipe and liner pipe; also may serve to protect against erosion.

Cellular grout
Cement, or cement fly-ash-based grout made with a multitude of macroscopic, non-interconnected air cells, which are distributed throughout the mass to lower the density and increase the ability of the material to flow into the annular space. Various strengths and densities of cellular grout are available.

Cement
In the most general sense of the word, cement is a binder, a substance which sets and hardens independently, and can bind other materials together. Hydraulic cements are materials which set and harden after combining with water, as a result of chemical reactions with the mixing water and, after hardening, retain strength and stability. Cement will set (hydrate) even when under water.

Collapse strength
The strength of Snap-Tite® or other reliner pipe to resist a force applied by soil loads, live loads and/or hydraulic loading. The strength is typically measured in feet of head or psi and is commonly referred to during the grouting process of the annular space.

Come-a-long
A lever powered chain puller; it can be used to pull the two sections of Snap-Tite® pipe together. There are both chain and cable come-a-longs available. Chain come-a-longs are safer for this application.

Compressive Strength of grout
The measure of how many pounds per square inch, “psi,” that a grout will hold prior to fracturing. This value is measured by crushing, by compression, test cylinders or cubes in a machine.

Concrete
A mixture of aggregates and paste. The aggregates are coarse aggregates (gravel or rock) and fine aggregates (sand); the paste is water and cement.

Density of cellular grout
By varying the amount of air content in the cellular grout, the mixture can be made to have a density as low as 20 pounds per cubic foot, and as high as the density of the non-foamed grout. Each density will exhibit a corresponding compressive strength. Typical densities are 30 – 80 pounds per cubic foot.

Density of grout
Cement grout is usually made using fine sand aggregate with the paste (cement and water). Typical weights are from 90 to 140 lbs. per cubic foot.

Density of water
Water weighs 62.4 lbs. per cubic foot.

Design life
The expected useful life of pipe in a given application when exposed to specific design loads and temperatures. Design life is typically measured in years. Typical HDPE design life is 50-100 years.

Displacement
The result of buoyant forces acting on an object and moving it from its original position or, in the case of pipe, its original grade and alignment. Displacement is typically referred to when describing precautions necessary during the annular space grouting process.

Flotation
The act of being on top of a liquid. The force applied when a liquid is displaced.

Flowable fill
A mixture usually comprised of combinations of cement, water, fine aggregate (sand) and sometimes fly ash. Typically flowable fill is used in place of granular (sand or crushed stone) fill to support pipe in a trench. Snap-Tite® Culvert Liners are often grouted into a rehabilitated culvert with flowable fill.

Fly ash
The powdery residue of matter that remains after burning coal in an electric power plant. It is a fine residue that, when dry literally flies in the air. Fly ash reacts with calcium hydroxide in the presence of water to form compounds possessing cementitious properties. Fly ash is often used to replace some of the cement in concrete mixtures, as it is less expensive and offers positive property attributes to the concrete mix.

Gasket
A rubber or synthetic rubber (typically polyisoprene) packing used to make a watertight connection. A gasket constructed of materials meeting the requirements of ASTM F477 is shipped with all Snap-Tite® pipe.

Grout
A mixture of cementitious material and water, with or without aggregate, proportioned to produce a pourable consistency without segregation of its constituents. Grout may also contain fly ash, slag, and liquid admixtures. Grout is different than mortar; grout need not contain aggregate (sand) whereas mortar contains fine aggregate. Grout is used to fill spaces whereas mortar bonds elements together, as in masonry construction.

Grout pump
A machine used to move grout from the mixing container to the culvert location. Specific types of grout pumps are more acceptable for cellular grout, such as Peristaltic Pumps with a progressive squeezing action or Rotor-Stator Pumps.

Headwater
The water surface elevation on the upstream side of a culvert providing the energy to force water through the culvert.

Host Pipe
The existing pipe or culvert that is being repaired or rehabilitated. Typically the host pipe is experiencing structural distress and is relined with a structural element such as Snap-Tite®.

ID
Inside Diameter is the measure of the actual opening of a pipe or liner.

Inlet Control
One of two basic types of flow control in culvert hydraulics where the culvert barrel is capable of conveying more flow than the inlet will accept.

Internal support
Usually wooden boards used inside of a pipe or liner to prevent deformation when load is applied from the outside.

Invert
Lowest point in the channel cross section or at flow control devices such as weirs, culverts, or dams. For a round pipe, the bottom most portion of the pipe inside diameter.

Ladder bracing
Wooden planks or assembled boards to support a pipe, liner, or tank. The assembled support looks like a ladder.

Lands and Grooves
Land is a term used to describe a flat, machined surface on a circular part. A groove is a long, narrow cut into a surface. The Snap-Tite® connection is made by machining the OD (male end) on one end of a liner pipe forming lands and grooves; the ID (female end) of the other pipe to be joined with surfaces that will fit and make a strong connection.

Lift
The act of raising the level or surrounding elevation of a structural material in predefined increments. This term is used to describe the process of partial filling of a pipe or trench with structural material. When the annular space between a Snap-Tite® Culvert Liner and host pipe or existing culvert is partially filled, a lift of grout has been poured or pumped into place.

Lift relief pipes
A relief pipe allows air and water to be removed from the annular space. A lift relief pipe allows filling of the annular space with grout to the level of the relief pipe. When grout flows from the lift relief pipe, the level for that lift has been reached.

Lubricant
A substance used for reducing friction. Soap, vegetable oil, or other non-petroleum-based substances can be used to reduce the force required to make a Snap-Tite® connection. Place the lubricant on the male end of the Snap-Tite® Culvert Liner to reduce the chance that the gasket will be moved out of the groove during installation.

Mastic
A resin used to make adhesive cement. This is sometimes used in addition to the Snap-Tite® gasket to ensure a watertight connection.

Nose cone
A tapered shaped cut into the liner pipe to make it slide into place as the liner is pulled into place.

OD
Outside diameter is the measure of the actual outside diameter of the pipe liner.

Outlet Control
One of two types of flow control in culvert hydraulics where the barrel is not capable of conveying as much flow as the inlet opening will accept.

Retarder
Additives used to delay the time before the curing or setting up of a cement grout or concrete mix. Fly ash, when used, often acts as a retarder.

Ring compression strength
The term used to describe the strength of a pipe, tank or structure to resist collapse from compressive force(s) applied around the circumference of the pipe, tank or structure. Water applies this loading to a submerged pipe. Vacuum on the inside of a pipe can also apply this loading.

Riprap
Layer or facing of rock or broken concrete dumped or placed to protect a structure or embankment from erosion; also the rock or broken concrete suitable for such use.

RPS – Rehabilitated Pipe System
Refers to installing Snap-Tite® in an existing culvert and placing grout in between the liner and host pipe to create a rehabilitated pipe system.

Scour
Erosion of streambed or bank material due to flowing water; often considered as being localized.

Screen
A plate with openings of set sizes to allow only particles of that size or smaller to pass. A 16-mesh screen means that there are 16 holes per square inch. Each hole would be less than .25 inches in diameter.

Skids
Wooden, plastic, or metal blocks mounted on the bottom of Snap-Tite® or other reliner pipe used to facilitate the placement of Snap-Tite® in a host pipe. The use of skids are particularly useful when the host pipe grade and alignment is non-uniform.

Sliplining
The process of pulling or pushing a smaller pipe or liner inside of an existing host pipe or culvert.

Strength of grout
See Compressive Strength of Grout

Tailwater
The depth of water on the downstream side of a culvert measured from the outlet invert, and an important factor in outlet control culvert hydraulics.

Vents
Openings formed to allow the escape or entry of gas or liquid into or out of an enclosed area.

Voids
An empty space within a solid section. When air is trapped in the annular space between the liner and the culvert, grout cannot fill this space. A “void” is formed in the grout. There is a loss of strength in the grout because of the void.

Weight of grout
A term used to describe weight of one cubic foot of grout. Cement grout is usually made using fine sand aggregate. Typical weights are from 75 to 100 lbs. per cubic foot.

Snap-Tite® is manufactured by ISCO Industries, Inc.

Terms and Conditions

All sales with ISCO Industries, Inc. ("Seller") are subjected to the following terms and conditions.

Acceptance: All sales are subject to the approval and acceptance by an authorized representative of Seller.

Cancellation: Any sale that is in the process of production or shipment is not subject to cancellation, deferment of delivery, or change of specification without the approval of an authorized representative of Seller.

Freight: Unless specifically stated that freight is allowed, all orders shall be F.O.B shipping point. When freight is allowed, the prices are F.O.B. from the shipment point, with freight allowed to specified destination. The point or origin of the shipment, the method of transportation, and the routing of shipments are at the discretion of Seller.

Returned Goods: Buyer shall not return any goods without obtaining authorization from Seller. Goods returned for credit must be in new condition and will be subjected to a minimum twenty-five percent (25%) restocking charge, F.O.B Seller shipping location. Only standard stocking items with a standard part number are eligible for return. Non-standard items, items shipped direct from a manufacturer, or specialty-made goods will not be accepted for return. Any items/structures/goods that require a Seller-furnished Work Order and/or a Computer Automated Drawing will not be accepted for return.

Performance: All promises as to the date of shipment are made in good faith. Seller will attempt to keep such promises by taking every reasonable precaution in the placing of its orders and obligating its manufacturers to ensure that they carry out their agreements. Since all manufacturers accepting orders specifically deny any liability for consequential damages this proposal is made with the distinct understanding that Seller will not be held liable for damages of any kind.

Limited Warranty: Products manufactured by Seller are warranted only to the extent that Seller will furnish replacement parts, free of charge, F.O.B. shipping location; or at Seller's option, will refund the purchase price of any product which, when installed and used was recommended by Seller and in accordance with the best installation and operating practices and techniques, is proven to be defective in material or workmanship within one (1) year from the date of shipment. Seller must receive immediate notice of the defect and the opportunity to inspect the same at the place of installation. Products sold by Seller which are manufactured by others are warranted only to the extent of, and are limited to, the warranty of the manufacturer.

The warranties set forth above are in lieu of all other warranties, express or implied, including the warranties of merchantability and fitness for a particular purpose. Seller shall not be liable to Buyer or any other party for negligence, strict liability, or any other delay, act, or error, for losses of any kind. Seller shall not be liable to Buyer or any other party for direct, indirect, special, or consequential damages.

Without limitation of the foregoing, Seller's liability to any other product whether by warranty or otherwise, shall in no event exceed the original purchase price of the warranted product.

The above stated limitations may be waived or modified only by writing signed by a duly authorized representative of Seller.

Payment Terms: All credit is subject to the approval of Seller's credit department. Unless otherwise noted in the terms of the sale, all sales are on Net 30 terms. A service charge in the amount of one-and-one half percent (1-1/2%) per month or eighteen percent (18%) per year or at the greatest amount permitted by law, will be added to any account thirty (30) days past due. Seller reserves the right to require full or partial payment in advance of shipment when the financial condition of the Buyer does not justify continuance of shipment on the terms of payment specified. Order from buyers with approved credit may be shipped C.O.D. after Buyer's approval.

Taxes: Prices do not include any present or future federal, state, or local taxes unless specifically stated. t is the responsibility of Buyer to assume all taxes. When applicable, taxes may be added to the purchase price and be paid by Buyer unless Buyer furnishes a tax-exemption certificate in a form agreeable to the respective authority.

Waiver, Modification: Waiver of Seller of any breach of these terms and conditions shall not be constructed as a waiver of any other breach. These terms and conditions represent the complete agreement between Buyer and Seller. No terms or conditions in any way adding to or modifying the provisions shall bind Seller; without written consent from a duly authorized representative of Seller.

NOTES:

NOTES:

SnapTite®

WWW.CULVERT-REHAB.COM | 800-CULVERT