FIRST AMENDMENT TO

CONTRACT NUMBER

PC66386

BETWEEN

THE NEW YORK STATE OFFICE OF GENERAL SERVICES

AND

JOE BASIL CHEVROLET INC.

NYS Office of General Services

Serving New York

THIS FIRST AMENDMENT by and between the New York State Office of General Services, a part of the Executive Department organized and existing under the laws of the State of New York, and having its principal place of business located at the Empire State Plaza, Albany, New York 12242, hereinafter referred to as “OGS” or "State", and Joe Basil Chevrolet Inc. (“Joe Basil” or “Contractor”) with offices at 5111 Transit Road, Depew, NY. The foregoing are collectively referred to as the “Parties”.

WITNESSETH:

WHEREAS, the State and the Contractor heretofore entered into Contract # PC66386 dated January 9, 2014 for Light Duty Vehicles Including Law Enforcement, under which Contractor provides the 2014 Chevrolet Caprice Model No. 1EW19, for Lot V, Item 7;

WHEREAS, the Original Equipment Manufacturer of the Chevrolet Caprice has increased the Manufacturer’s Bid Assistance for the vehicle as permitted under Section III.8, *Price*, reducing the Unit Price of the vehicle; and

WHEREAS, Contractor has agreed to provide the Chevrolet Caprice, Lot V, Item 7, at the reduced price as set forth in the amended Appendix C, *Light Duty Vehicles Including Law Enforcement (Statewide) Documents*, Number 2, Price Pages, dated February 13, 2014, attached hereto, for all orders placed under the Contract on and after January 9, 2014, the effective date of the Contract.

NOW THEREFORE, in consideration of the terms hereinafter mentioned and also the mutual covenants and obligations moving to each Party hereto from the other, the Parties hereby agree as follows:

Section 1:

Appendix C, *Light Duty Vehicles Including Law Enforcement (Statewide) Documents*, Number 2, Price Pages, is deleted and replaced with the Appendix C, *Light Duty Vehicles Including Law Enforcement (Statewide) Documents*, Number 2, Price Pages dated February 13, 2014, attached hereto, the terms of which are expressly incorporated into this Agreement.

Section 2:

Contractor agrees to and shall apply the Unit Price for the Chevrolet Caprice, Lot V, Item 7, set forth in the Appendix C, *Light Duty Vehicles Including Law Enforcement (Statewide) Documents*, Number 2, Price Pages dated February 13, 2014, attached hereto, to all orders placed for such vehicle on and after January 9, 2014, the effective date of the Contract.

Section 3:

Except as herein modified all other terms and conditions of Contract PC66386 shall remain in full force and effect.

IN WITNESS WHEREOF, the parties have executed this First Amendment to Contract PC66386 as of the date last written below.

The parties further hereby certify that original copies of this executed and approved signature page will be affixed, upon final approval by the OGS, to exact copies of this First Amendment to Contract PC66386 being executed simultaneously herewith.

CONTRACTOR

Signature: _____

Printed Name: MICHAEL HOPKINS

Title: SPECIALTY VEHICLE SALES

Company Name: JOE BASIL CHEVROLET, INC

Federal ID: 16-1068991

NYS Vendor ID 1100005392

Date: 2/17/2014

THE PEOPLE OF THE STATE OF NEW YORK

Signature: Sharon M Buck

Printed Name: Sharon Buck

Title: Assistant Director, NYSPro

Office of General Services

Date: 3/3/14

INDIVIDUAL, CORPORATION, PARTNERSHIP, OR LLC ACKNOWLEDGMENT

STATE OF NEW YORK }
: **Sworn Statement:**
COUNTY OF ERIE }

On the 17TH day of FEBRUARY in the year 2014, before me personally appeared MICHAEL HOPKINS, known to me to be the person who executed the foregoing instrument, who, being duly sworn by me did depose and say that _he maintains an office at Town of DEPEW, NY County of ERIE, State of NEW YORK; and further that:

[Check One]

(☐ **If an individual):** _he executed the foregoing instrument in his/her name and on his/her own behalf.

(■ **If a corporation):** _he is the SPECIALTY VEHICLE SALES CONSULTANT of JOE BASIL CHEVROLET, INC., the corporation described in said instrument; that, by authority of the Board of Directors of said corporation, _he is authorized to execute the foregoing instrument on behalf of the corporation for purposes set forth therein; and that, pursuant to that authority, _he executed the foregoing instrument in the name of and on behalf of said corporation as the act and deed of said corporation.

(☐ **If a partnership):** _he is the _____ of _____, the partnership described in said instrument; that, by the terms of said partnership, _he is authorized to execute the foregoing instrument on behalf of the partnership for purposes set forth therein; and that, pursuant to that authority, _he executed the foregoing instrument in the name of and on behalf of said partnership as the act and deed of said partnership.

(☐ **If a limited liability company):** _he is a duly authorized member of _____, LLC, the limited liability company described in said instrument; that, _he is authorized to execute the foregoing instrument on behalf of the limited liability company for purposes set forth therein; and that, pursuant to that authority, _he executed the foregoing instrument in the name of and on behalf of said limited liability company as the act and deed of said limited liability company.

TAYLOR JANE GRAJEK
Notary Public - State of New York
No. 01- GR6241268
Qualified in Erie County
My Commission Exp. 5/16/2015

Signature of Notary Public

Notary Public Registration No. 01-GR6241268 **State** NEW YORK

Appendix C, Number 2, Price Pages
February 13, 2014

Lot V: Item 7

Vehicle Description	Chevrolet Caprice (1EW19) 4dr Police Patrol Vehicle
Year / Make / Model	2014 Chevrolet Caprice (1EW19)
Contractor	Joe Basil Chevrolet Inc.
Unit Price	$34,588.64
Option Discount	15.00%
DOT Option Package Price	N/A
Pickup Credit (per vehicle)	$0.00

Vehicle Base Specifications	
Note: The actual vehicle awarded may exceed the minimum specifications stated below. The Authorized User may elect to add additional Options, delete Options, or substitute a vehicle feature that is an Option with another Option. See Contract Section III.6 Options.	
Equipment	As standard for 1EW19, unless specified below
Preferred Equipment Pkg.	Police (Option 1SB)
Engine	6.0L 8 cylinder SFI (Option L77)
Transmission	6-Speed Automatic (MX0)
	Limited Slip Differential (Option G80)
Wheels	18" Heavy-Duty Steel (RT3)
Tires	P235/50R18 AS BW (R5M)
	Full-Size Spare Wheel & Tire (Option SG8)
Seats	Front Bucket Seats w/Vinyl Rear Bench (Option HCQ)
Other Options	Monotone Paint Application (Paint)
	Police Package (Option 9C1)
	Radio: AM/FM Stereo w/CD Player & MP3 Playback (UFU)
	Head Curtain Side-Impact Air Bags (Option AYG)
	6 Cut Keys (Option AMF)
	Red & White Front Auxiliary Dome Lighting (Option 6C7)
	Inoperative Inside Rear Door Locks & Handles (Option 6N6)
	6N5 Inoperative Rear-Window Switches (Option 6N5)
	130mph Top Speed Limiter (Option SGT)
	Grille Lamps & Siren Speaker Wiring (Option 6J3)
	6J4 Horn & Siren Circuit Wiring (Option 6J4)
	DRL Compatible Headlamp & Taillamp Flasher System (Option 6J7)
	Outside Heated Power-Adjustable Mirrors (Option DR9)

Lot V: Item 7 Cont.

Interior Color	Jet Black (Option 4AA)
Exterior Color	Phantom Black Metallic (Option GIE)
Emissions	CT/DE/ME/MD/MA/NJ/NY/OR/PA/RI/VT/WA Emissions Req (Option NE1)
Special Equipment	The following additional Special Equipment Option Package will be provided by KERR INDUSTRIES and factory installed on the vehicle prior to delivery:
	KERR OPTION PACKAGE: KT-NYSP-2014-9C1
	Bidding dealers can contact Mr. Brad Baker: 1-800-585-1774, Kerr Industries for Special Equipment Option Package pricing.

AGREEMENT FOR LIGHT DUTY VEHICLES
including
LAW ENFORCEMENT
(Statewide)

BETWEEN

THE NEW YORK STATE OFFICE OF GENERAL SERVICES

AND

JOE BASIL CHEVROLET INC.

CONTRACT NUMBER

PC66386

NYS Office of General Services
Serving New York

THIS AGREEMENT (hereinafter the "Contract" or the "Agreement") is made this 9th day of January, 2014, by and between the People of the State of New York, acting by and through the Commissioner of the New York State Office of General Services ("OGS") whose office is on the 41st Floor, Tower Building, Governor Nelson A. Rockefeller Empire State Plaza, Albany, New York 12242 (hereinafter "OGS" or "State"), and Howell & Pierson Inc. DBA Main Motorcar ("Main Motorcar" or "Contractor") with offices at 224 W. Main Street, Johnstown, NY. OGS and the Contractor are collectively referred to herein as "the Parties."

WITNESSETH:

WHEREAS, OGS issued a competitive solicitation, referenced as Invitation for Bids (IFB) #22737, for Light Duty Vehicles Including Law Enforcement, which was advertised in the August 14, 2013 edition of the New York State Contract Reporter as required by the New York State Economic Development Law.

WHEREAS, the IFB was for fifty-nine (59) vehicles (Items), and in accordance with State Finance Law §163(4)(b)(ii)(C) a decision was made to divide the vehicles divided into five (5) separate Lots

WHERAS, the IFB provided that the contracts will be awarded on a single Lot basis for Lot I, and on an individual item basis for Lots II, III, IV and V.

WHEREAS, the IFB was amended on August 29, 2013 to move one Item from Lot I to Lot II, and to add two (2) Items to Lot IV, for a total of sixty-one (61) vehicles (Items).

WHEREAS, OGS conducted a competitive process to identify bidders that provided the lowest price on Lot I and on each individual Item in Lots II, III, IV and V.

WHEREAS, the State has determined the Contractor submitted a responsive proposal, and had the lowest price for the Items identified in the Contract. The Contractor is willing to provide the vehicles set forth in the Contract.

NOW THEREFORE, in consideration of the terms hereinafter mentioned and also the mutual covenants and obligations moving to each Party hereto from the other, the Parties hereby agree as follows:

TABLE OF CONTENTS

SECTION I. SCOPE AND GENERAL INFORMATION 5

I.1 SCOPE 5

I.2 DEFINITIONS 5

SECTION II. GENERAL TERMS AND CONDITIONS 7

II.1 APPENDIX A 7

II.2 APPENDIX B 7

II.3 APPENDIX C 7

II.3.1 APPENDIX D 7

II.4 APPENDIX B MODIFICATIONS 7

II.5 MERCURY ADDED CONSUMER PRODUCTS 9

II.6 DIESEL EMISSION REDUCTION ACT OF 2006 (NEW REQUIREMENT OF LAW) 9

II.7 VENDOR RESPONSIBILITY 9

II.8 USE OF RECYCLED OR REMANUFACTURED MATERIALS 10

II.9 PURCHASE ORDERS AND INVOICING 10

II.10 CONTRACT PAYMENTS 11

II.11 NOTE TO AUTHORIZED USERS 11

II.12 "OGS OR LESS" GUIDELINES APPLY TO THIS CONTRACT 11

II.13 NON-STATE AGENCIES PARTICIPATION IN CENTRALIZED CONTRACTS 12

II.14 EXTENSION OF USE 12

II.15 EXTENSION OF USE COMMITMENT 12

II.16 CONTRACT PERIOD AND RENEWALS 12

II.17 POOR PERFORMANCE 13

II.18 BASIC WARRANTY 13

II.19 ADVERTISING 13

II.20 OVERLAPPING CONTRACT ITEMS 14

II.21 IRAN DIVESTMENT ACT 14

II.22 PARTICIPATION BY MINORITY GROUP MEMBERS AND WOMEN WITH RESPECT TO STATE CONTRACTS: REQUIREMENTS AND PROCEDURES 14

II.23 GENERAL REQUIREMENTS 16

II.24 REPORT OF CONTRACT USAGE 16

II.25 CONTRACTOR INSURANCE REQUIREMENTS 16

SECTION III. SPECIAL TERMS AND CONDITIONS 17

III.1 EQUIPMENT TO BE FURNISHED WITH AN ITEM 17

III.2 MOTOR VEHICLE REGULATIONS 17

III.3 EMISSIONS CONTROLS 17

III.4 DMV INSPECTION 17

III.5 PRICE SHEETS AND CATALOGS 17

III.6 OPTIONS 18

III.7 REPLACEMENT VEHICLES 20

III.8 PRICE 21

III.9 DELIVERY 23
III.10 SERVICE 24
III.11 PILOT MODEL FOR LOT V 25
III.12 AVAILABILITY 25
III.13 RECALLS 25
III.14 FORD FIN CODE NUMBER 25
III.15 PERFORMANCE AND BID BONDS 26
III.16 DISPUTE RESOLUTION POLICY 26
III.17 CAPTIONS 26
III.18 SEVERABILITY 26
III.19 COUNTERPARTS 26
III.20 ENTIRE AGREEMENT 26

APPENDICES

APPENDIX A – *Standard Clauses for New York State Contracts (December 2012)*

APPENDIX B – *General Specifications (July 2006)*

APPENDIX C – *Light Duty Vehicles Including Law Enforcement (Statewide) Documents:*

Number 1, Awarded Items

Number 2, Price Pages

Number 3, Report of Contract Usage

Number 4, Contractor Information

Number 5, Contractor Insurance Requirements

APPENDIX D – *Minority and Women-Owned Business Enterprises and Equal Employment Opportunity Policy Statement*

SECTION I. SCOPE AND GENERAL INFORMATION

I.1 SCOPE

This Contract is for the purchase of 2014 or current model year vehicles and related options, as specified herein, to be used by State agencies and others authorized by New York State Law.

Contractor has been awarded the Items set forth in Appendix C, Light Duty Vehicles Including Law Enforcement (Statewide) Documents, Number 1, Awarded Items.

Appendix C, Light Duty Vehicles Including Law Enforcement (Statewide) Documents, Number 2, Price Pages, sets forth the prices for the vehicles and the discount from MSRP for Options under this Contract.

The vehicles shall include all standard equipment normally sold and marketed to the retail public.

The State may permit the substitution of a new replacement model or a new replacement product line if the model series or the product line originally awarded is discontinued, replaced, or made unavailable by the Original Equipment Manufacturer (OEM). The Unit Price for such replacement shall be determined by taking the Factory Invoice Price (including all outlined specifications for the vehicle), applying the Manufacturer's Bid Assistance for the vehicle, and applying the dealer Discount percentage originally bid for the vehicle being replaced.

References to the State and its Agencies as Authorized Users under this solicitation and the ensuing contract(s) encompass and include all such entities within the definition of "Authorized User" set forth in State Finance Law §163(1)(k).

The Contractor(s) must furnish all quantities or dollar values actually ordered.

I.2 DEFINITIONS

Terms used in the Contract that have a capitalized first letter shall be defined in accordance with Appendix B, §5 *Definitions*, which is hereby incorporated by reference. In addition, the following definitions shall apply:

"Authorized User(s)" as defined in State Finance Law §163(1)(k).

"**Contract"** as defined in Appendix B.

"Contractor" shall refer to a responsive and responsible Bidder who has attained the lowest Total for Item score for a particular Item or Items, or the lowest Grand Total of Bid score, as applicable, and is working under an executed contract with New York State. Contractor is a general term.

"Current Model Year" shall mean either 2014, or if final published 2014 MY pricing is not available from the OEM, the Current Model Year shall be the final published vehicle pricing for the MY currently available from the OEM (e.g. 2013 or 2015).

"Dealer Discount" shall refer to the percentage credit to Authorized User for Contractor's typical overhead expenses in non-fleet purchases (such as advertising/marketing, special planning, sales incentive programs, etc.)

"Dealer Invoice" shall refer to the document which lists, at a minimum,

(1) the make and model of the vehicle bid;
(2) the MSRP of the vehicle with included Options; and
(3) the Factory Invoice Price (also known as Factory Wholesale Price or Dealer Invoice Price) for the vehicle, inclusive of destination charges, standard equipment, Options and upfits, if applicable.

"Factory Invoice Price" shall refer to the price the OEM charges a Contractor for an Option or a vehicle inclusive of all standard equipment, Options, and destination charges. Also known as "Factory Wholesale Price" or "Dealer Invoice Price"

"Final Order Due Date" shall mean the last calendar date that an Authorized User may issue a Purchase Order to the Contractor for a vehicle, in order to have the vehicle built before MY Build-Out Date.

"Item" shall refer to a vehicle and its corresponding Options as set forth in Appendix C, Light Duty Vehicles Including Law Enforcement (Statewide) Documents, Number 1, Price Pages.

"Lot" shall refer to the grouping of Items as referenced in Appendix C, Light Duty Vehicles Including Law Enforcement (Statewide) Documents, Number 1, Price Pages.

"M/WBE" shall refer to a business certified with Empire State Development (ESD) as a Minority and/or Women-owned Business Enterprise

"Manufacturer's Bid Assistance" shall refer to the manufacturer's credit to the State for fleet purchases and is applied to the Factory Invoice Price

"MSRP" shall refer to the Manufacturer's Suggested Retail Price

"May" denotes the permissive in a contract clause or specification. "May" does not mean "required." Also see "Shall" and "Must."

"Model Year (MY)" shall mean the year used to designate a discrete vehicle model, irrespective of the calendar year in which the vehicle was actually produced, provided that the production period does not exceed 24 months.

"MY Build-Out Date" shall mean the last date of manufacture for the Model Year of a vehicle.

"Must" denotes the imperative in a contract clause or specification. "Must" is synonymous with "required." Also see "Shall" and "May."

"Net Options Cost" shall refer to the Total Estimated Options less Options percentage discount.

"New York State Procurement (NYSPro)"(formerly known as Procurement Services Group (PSG)" shall mean a division of the New York State Office of General Services which is authorized by law to issue centralized, statewide contracts for use by New York agencies, political subdivisions, schools, libraries and others authorized by law to participate in such contracts. The terms NYSPro and PSG shall be used interchangeably for purposes of this solicitation.

"NYS Vendor ID" shall refer to the ten-character identifier issued by New York State when a vendor is registered on the Vendor File.

"OEM" shall refer to the Original Equipment Manufacturer.

"OEM Vehicle Specifications" shall refer to the document(s) issued by the vehicle manufacturer which lists, among other things,

(1) all standard equipment for the vehicle;

(2) all Options available for the vehicle, including the code number for each Option;

(3) the MSRP for the vehicle and available Options; and

(4) the Factory Invoice Price for the vehicle and available Options.

"Options" shall refer to an accessory, equipment, or feature that can be added to, or deleted from, a vehicle.

"Pick up Credit" shall refer to the amount of credit an Authorized User would receive from contractor should an Authorized User choose to pick-up vehicle(s) ordered from either the contractor or contractor's courtesy dealer in lieu of having vehicle delivered. Such credit must appear on Authorized Users Invoice.

"Shall" denotes the imperative in a contract clause or specification. "Shall" is synonymous with "required." Also see "Must" and "May."

"Unit Price" shall refer to the Factory Invoice Price minus the Manufacturer's Bid Assistance and minus the Dealer Discount.

SECTION II. GENERAL TERMS AND CONDITIONS

II.1 APPENDIX A

Appendix A, *Standard Clauses For New York State Contracts*, dated December 2012, attached hereto, is hereby expressly made a part of this Contract as fully as if set forth at length herein.

II.2 APPENDIX B

Appendix B, *Office of General Services General Specifications*, dated July 2006, attached hereto, is hereby expressly made a part of this Contract as fully as if set forth at length herein and shall govern any situations not covered by this Bid Document or Appendix A.

II.3 APPENDIX C

Appendix C – *Light Duty Vehicles Including Law Enforcement (Statewide) Documents*, comprised of the documents below, is hereby expressly made part of this Contract as fully as if set forth at length herein.

Number 1, Awarded Items

Number 2, Price Pages

Number 3, Report of Contract Usage

Number 4, Contractor Information

Number 5, Contractor Insurance Requirements

II.3.1 APPENDIX D

Appendix D – *Minority and Women-Owned Business Enterprises and Equal Employment Opportunity Policy Statement*, is hereby expressly made part of this Contract as fully as if set for the at length herein.

II.4 APPENDIX B MODIFICATIONS

The following Appendix B clauses are hereby modified for the purposes of this Contract:

A. Section 4, *Conflict of Terms*, is deleted and replaced with the following language:

4. <u>CONFLICT OF TERMS AND CONDITIONS</u> Conflicts among the documents shall be resolved in the following order of precedence:

a) Appendix A, Standard Clauses for New York State Contracts;
b) This Agreement, exclusive of all other Appendices;
c) Appendix B, General Specifications; and
d) Appendix C, Light Duty Vehicles Including Law Enforcement (Statewide) Documents:
    1. Number 1, Awarded Items
    2. Number 2, Price Pages
    3. Number 3, Report of Contract Usage
    4. Number 4, Contractor Information
    5. Number 5, Contractor Insurance Requirements

B. Section 5, *Definitions*, the definition of “Authorized User” is deleted and replaced with the following language:

“Authorized User” shall have the same meaning as that term is defined in State Finance Law Section 163(1)(k).

C. Section 33, *Equivalent or Identical Bids*, is deleted and replaced with the following language:

33. <u>EQUIVALENT OR IDENTICAL BIDS</u> In the event two offers are found to be substantially equivalent, the highest discount from MSRP Options shall be the basis for determining the award recipient. If two or more Bidders submit substantially equivalent Bids as to pricing or other factors, the decision of the Commissioner to award a Contract to one or more of such Bidders shall be final.

D. Section 45, *Product Delivery*, is deleted and replaced in its entirety by Section III.9 of this Contract, *Delivery*.

E. Section 62, *Contract Billings*, is deleted and replaced with the following:

62. <u>CONTRACT BILLINGS AND PAYMENTS</u>:

a) Billings. Contractor and the dealers/distributors/resellers designated by the Contractor, if any, shall provide complete and accurate billing invoices to each Authorized User in order to receive payment. Billing invoices submitted to an Authorized User must contain all information required by the Contract and the State Comptroller or other appropriate fiscal officer. Submission of an invoice and payment thereof shall not preclude the Commissioner from requesting reimbursement or demanding a price adjustment in any case where the Product delivered is found to deviate from the terms and conditions of the Contract or where the billing was inaccurate.

Contractor shall provide, upon request of the Commissioner, any and all information necessary to verify the accuracy of the billings. Such information shall be provided in the format requested by the Commissioner and in a media commercially available from the Contractor. The Commissioner may direct the Contractor to provide the information to the State Comptroller or to any Authorized User of the Contract.

b) Payment of Contract purchases made by an Authorized User when the State Comptroller is responsible for issuing such payment. The Authorized User and Contractor agree that payments for invoices submitted by the Contractor shall only be rendered electronically unless payment by paper check is expressly authorized by the Commissioner, in the Commissioner's sole discretion, due to extenuating circumstances. Such electronic payments shall be made in accordance with ordinary State procedures and practices. The Contractor shall comply with the State Comptroller's procedures to authorize electronic payments. Authorization forms are available at the State Comptroller website at http://www.osc.state.ny.us/epay/index.htm or by e-mail at epayments@osc.state.ny.us. Contractor acknowledges that it will not receive payment on any invoices submitted under this Contract that are payable by the State Comptroller if it does not comply with the State Comptroller's electronic payment procedures, except where the Commissioner has expressly authorized payment by paper check as set forth above. Inquiries relating to OSC's Electronic Payments program should be directed to:

NYS Office of the State Comptroller
Vendor Management Unit
110 State Street Mail Drop 10-4
Albany, NY 12236
Telephone: (855) 233-8363
E-Mail: helpdesk@sfs.ny.gov

c) Payment of Contract purchases made by an Authorized User when the State Comptroller is not responsible for issuing such payment. The Authorized User and Contractor agree that payments for such Contract purchases shall be billed directly by Contractor on invoices/vouchers, together with complete and accurate supporting documentation as required by the Authorized User. Such payments shall be as mandated by the appropriate governing law from the receipt of a proper invoice. Such Authorized User and Contractor are strongly encouraged to establish electronic payments.

II.5 MERCURY ADDED CONSUMER PRODUCTS

Effective January 1, 2005, Article 27, Title 21 of the Environmental Conservation Law bans the sale or distribution free of charge of fever thermometers containing mercury except by prescription written by a physician and bans the sale or distribution free of charge of elemental mercury other than for medical pre-encapsulated dental amalgam, research, or manufacturing purposes due to the hazardous waste concerns of mercury. The law further states that effective July 12, 2005, manufacturers are required to label mercury-added consumer products that are sold or offered for sale in New York State by a distributor or retailer. The label is intended to inform consumers of the presence of mercury in such products and of the proper disposal or recycling of mercury-added consumer products. Contractor is encouraged to contact the Department of Environmental Conservation, Bureau of Solid Waste, Reduction & Recycling at (518) 402-8705 or the Bureau of Hazardous Waste Regulation at 1-800-462-6553 for questions relating to the law. Contractor may also visit the Department's web site for additional information: http://www.dec.ny.gov/chemical/8512.html.

II.6 DIESEL EMISSION REDUCTION ACT OF 2006 (NEW REQUIREMENT OF LAW)

On February 12, 2007 the Diesel Emissions Reduction Act took effect as law (the “Law”). Pursuant to new §19-0323 of the N.Y. Environmental Conservation Law (“NYECL”) it is now a requirement that heavy duty diesel vehicles in excess of 8,500 pounds use the best available retrofit technology (“BART”) and ultra low sulfur diesel fuel (“ULSD”). The requirement of the Law applies to all vehicles owned, operated by or on behalf of, or leased by State agencies and State or regional public authorities. They need to be operated exclusively on ULSD by February 12, 2007. It also requires that such vehicles owned, operated by or on behalf of, or leased by State agencies and State or regional public authorities with more than half of its governing body appointed by the Governor utilize BART.

As a contract vendor the Law may be applicable to vehicles used by contract vendors “on behalf of” State agencies and public authorities. All heavy duty diesel vehicles must have BART by December 31, 2012. The Law also provides a list of exempted vehicles. Regulations currently being drafted will provide further guidance as to the effects of the Law on contract vendors using heavy duty diesel vehicles on behalf of the State. The Law also permits waivers of ULSD and BART under limited circumstances at the discretion of the Commissioner of Environmental Conservation. The Law will also require reporting from State agencies and from contract vendors in affected contracts.

Contractor certifies and warrants that all heavy duty vehicles, as defined in NYECL §19-0323, to be used under this contract, will comply with the specifications and provisions of NYECL §19-0323, and any regulations promulgated pursuant thereto, which requires the use of BART and ULSD, unless specifically waived by NYSDEC. Qualification and application for a waiver under this Law will be the responsibility of the Contractor.

II.7 VENDOR RESPONSIBILITY

The Contractor shall at all times during the Contract term remain responsible. The Contractor agrees, if requested by the Commissioner of OGS or her designee, to present evidence of its continuing legal authority to do business in New York State, integrity, experience, ability, prior performance, and organizational and financial capacity.

The Commissioner of OGS or her designee, in his or her sole discretion, reserves the right to suspend any or all activities under this Contract, at any time, when he or she discovers information that calls into question the responsibility of the Contractor. In the event of such suspension, the Contractor will be given written notice outlining the particulars of such suspension. Upon issuance of such notice, the Contractor must comply with the terms of the suspension order. Contract activity may resume at such time as the Commissioner of OGS or her designee issues a written notice authorizing a resumption of performance under the Contract.

Upon written notice to the Contractor, and a reasonable opportunity to be heard with appropriate OGS officials or staff, the Contract may be terminated by the Commissioner of OGS or her designee at the Contractor’s expense where the Contractor is determined by the Commissioner of OGS or her designee to be non-responsible. In such event, the Commissioner of OGS or her designee may complete the contractual

requirements in any manner he or she may deem advisable and pursue available legal or equitable remedies for breach.

In no case shall such termination of the Contract by the State be deemed a breach thereof, nor shall the State be liable for any damages for lost profits or otherwise, which may be sustained by the Contractor as a result of such termination.

II.8 USE OF RECYCLED OR REMANUFACTURED MATERIALS

New York State, as a member of the Council of Great Lakes Governors, supports and encourages vendors to use recycled, remanufactured or recovered materials in the manufacture of products and packaging to the maximum extent practicable without jeopardizing the performance or intended end use of the product or packaging unless such use is precluded due to health or safety requirements or product specifications contained herein. Refurbished or remanufactured components or products are required to be restored to original performance and regulatory standards and functions and are required to meet all other requirements of this bid solicitation. Warranties on refurbished or remanufactured components or products must be identical to the manufacturer's new equipment warranty or industry's normal warranty when remanufacturer does not offer new equipment. See "*Remanufactured, Recycled, Recyclable or Recovered Materials*" in Appendix B, OGS General Specifications.

II.9 PURCHASE ORDERS AND INVOICING

General - All orders and invoices/vouchers shall include the contract number and a line by line listing of separate charges. All matters pertaining to registration and licensing of a vehicle are the responsibility of the ordering Authorized User.

Purchase Orders Involving Price Lists - Purchase orders are to include the following information when a vehicle or Option is purchased from a price list:

a. The name of the OEM or Non-OEM provider, number and date of the price list;
b. Product description;
c. Product code/manufacturer number;
d. Full MSRP for each product/Option/accessory;
e. NYS discount as applicable;
f. Liquidated damages, if any;
g. Calculation of NYS net contract price; and
h. Specific designation of special price which may be better than the NYS net Contract price.

Invoices - Authorized Users are instructed not to process invoices that do not include the required information set forth below. Invoices must be detailed and include in the body of the invoice or an attachment to the invoice **all** of the following items. Failure to comply may result in lengthy payment delays.

Invoices shall include, at a minimum, the following information:

a. Contract Number;
b. Purchase Order Number;
c. Contract Item Number;
d. Factory Invoice Price;
e. Dealer Discount;
f. Manufacturer’s Bid Assistance;
g. Line item breakdown of all charges;
h. Breakdown of Liquidated Damages (see III.11.5 *Liquidated Damages*);
i. If Options are purchased, they must be listed separately, line by line on the same invoice as the vehicle and include the MSRP, contract discount, net price and name of the provider if non-OEM.
j. Line item breakdown of any deletion; and
k. Contractor’s cost (invoice amount from Contractor’s supplier/OEM factory) to be shown.

II.10 CONTRACT PAYMENTS

Payments cannot be processed by Authorized Users until the vehicles have been delivered and accepted in accordance with Section III.9 *Delivery*. Payment will be based on any invoice used in the Contractor's normal course of business. However, such invoice must contain all requirements in Section II.9 *Purchase Orders and Invoicing*, including description of the vehicles as well as vendor identification number.

Authorized Users that are State Agencies are required to forward properly completed vouchers to the Office of the State Comptroller for audit and payment. All Authorized Users are urged to process every completed voucher expeditiously giving particular attention to those involving cash discounts for prompt payment.

If the contract terms indicate political subdivisions and others authorized by law are allowed to participate, those entities are required to make payments directly to the Contractor. Prior to processing such payment, the Contractor may be required to complete the ordering non-State agency's own voucher form.

II.11 NOTE TO AUTHORIZED USERS

When placing purchase orders under the contract(s), the Authorized User should be familiar with and follow the terms and conditions governing its use. The authorized user is accountable and responsible for compliance with the requirements of public procurement processes. The Authorized User, when purchasing from OGS contracts, should hold the contractor accountable for contract compliance and meeting the contract terms, conditions, specifications, and other requirements. Also, in recognition of market fluctuations over time, authorized users are encouraged to seek improved pricing whenever possible. Authorized Users have the responsibility to document purchases which should include:

- a statement of need and associated requirements,
- obtaining all necessary prior approvals,
- a summary of the contract alternatives considered for the purchase,
- the reason(s) supporting the resulting purchase (e.g., show that basis for the selection among multiple contracts at the time of purchase was the most practical and economical alternative and was in the best interests of the State).

MSRP and Factory Invoice Verification – An Authorized User may verify Factory Invoice and MSRP information, especially for Options. Websites with Factory Invoice and MSRP information include:

Edmunds:	http://www.edmunds.com/ and http://www.edmunds.com/new/index.html
Kelly Blue Book:	http://www.kbb.com/ and http://www.kbb.com/kb/ki.dll/ke.kb.sp?kbb&&&newCars;slp
Intelli Choice:	http://www.intellichoice.com/
NADA:	http://www.nadaguides.com/ and http://www.nadaguides.com/autohome2.aspx?Lnk=1&wSec=10&wPr=0&wPg=2111
Yahoo:	http://autos.yahoo.com/

II.12 "OGS OR LESS" GUIDELINES APPLY TO THIS CONTRACT

Purchases of the products included in the Contract are subject to the "OGS or Less" provisions of State Finance Law§ 163(3)(a)(.v). This means that State agencies can purchase products from sources other than the Contractor provided that such products are substantially similar in form, function or utility to the products herein and are:

1. lower in price

   -and/or-

2. available under terms which are more economically efficient to the State agency (e.g. delivery terms, warranty terms, etc.).

Agencies are reminded that they must provide the State Contractor an opportunity to match the non-contract savings at least two business days prior to purchase. In addition, purchases made under "OGS or Less" flexibility must meet all requirements of law including, but not limited to, advertising in the New York State Contract Reporter, prior approval of the Comptroller's Office and competitive bidding of requirements exceeding the discretionary bid limit. State agencies should refer to Procurement Council Bulletin "OGS or Less Purchases" for complete procedural and reporting requirements.

II.13 NON-STATE AGENCIES PARTICIPATION IN CENTRALIZED CONTRACTS

New York State political subdivisions and others authorized by New York State law may participate in contracts. These include, but are not limited to local governments, public authorities, public school and fire districts, public and nonprofit libraries, and certain other nonpublic/nonprofit organizations. See "*Participation in Centralized Contracts*" in Appendix B, *OGS General Specifications*. For purchase orders issued by the Port Authority of New York and New Jersey (or any other authorized entity that may have delivery locations adjacent to New York State), the terms of Section III.8 *Price* shall be modified to include delivery to locations adjacent to New York State.

Upon request, all eligible non-State agencies must furnish Contractors with the proper tax exemption certificates and documentation certifying eligibility to use State contracts. Questions regarding an organization's eligibility to purchase from New York State Contracts may also be directed to OGS NYSPro Customer Services at 518-474-6717.

II.14 EXTENSION OF USE

This Contract may be extended to additional States or governmental jurisdictions upon mutual written agreement between New York State (the lead contracting State) and the Contractor. Political subdivisions and other authorized entities within each participating State or governmental jurisdiction may also participate in this contract if such State normally allows participation by such entities. New York State reserves the right to negotiate additional discounts based on any increased volume generated by such extensions.

II.15 EXTENSION OF USE COMMITMENT

The Contractor agrees to honor all orders from State Agencies, Political Subdivisions and others authorized by law (see Section II.14 *Extension of Use*) which are in compliance with the pricing, terms, and conditions set forth in the resulting contract document.

Any unilateral limitations/restrictions imposed by the Contractor and/or manufacturer on eligible Authorized Users will be grounds for rejection of the bid or cancellation of the contract. If a contract, or any portion thereof, is canceled for this reason, any additional costs incurred by the eligible purchaser will be borne by the Contractor.

II.16 CONTRACT PERIOD AND RENEWALS

The contract shall commence from the date of receipt of all necessary approvals and shall terminate upon the OEM's MY Build-Out Date, or depletion of all stocks, whichever occurs last for the 2015 Model Year of the contract. Contractors will notify OGS, in writing, of the OEM's MY Build-Out Date. Such notification <u>must</u> be submitted immediately upon the Contractor being notified by the OEM.

II.16.1 MUTUAL EXTENSION OF TIME PERIOD

If mutually agreed between NYSPro and the Contractor, the next Model Year (MY) vehicle may be supplied if MY Build-Out Date has occurred for the Item awarded and the next MY has not been awarded under a new solicitation. For each next MY after Contract Award, Contractor shall supply NYSPro with documentation that the next MY vehicle meets or exceeds the specifications for the vehicle as set forth in the resultant contract(s). Prices shall be calculated in accordance with Section III.8.7 *Next Model Year and Replacement Vehicle Pricing*, and all terms and conditions remain in effect. Once the next MY has been awarded under a new solicitation, Contractor shall not accept Purchase Orders for the Contract. If the next MY has not been

awarded, Contractor may continue to supply current and next MY vehicles until depletion of stock or manufacturer's production build-out. The State reserves the right to terminate the Contract with cancellation terms of this Contract.

If mutually agreed between NYSPro and the Contractor, the Contract may be extended under the same terms and conditions for an additional period(s) of up to five years; extensions may be exercised on a continuing basis such as an additional three month, six month, twelve month or 24 month periods.

II.16.2 SHORT TERM EXTENSION

In the event the replacement contract has not been issued, any contract let and awarded hereunder by the State, may be extended unilaterally by the State for an additional period of up to one month upon notice to the Contractor with the same terms and conditions as the original contract including, but not limited to, quantities (prorated for such one month extension), prices, and delivery requirements. With the concurrence of the Contractor, the extension may be for a period of up to three months in lieu of one month. However, this extension terminates should the replacement contract be issued in the interim. If MY Build-Out Date for an Item has been reached, Contractor may offer next MY in accordance with Section II.16.1 *Mutual Extension of Time Period* for the extensions authorized by this section.

II.17 POOR PERFORMANCE

Authorized Users should notify NYSPro Customer Services promptly if the Contractor fails to meet the requirements of this contract. Performance which does not comply with requirements or is otherwise unsatisfactory to the Authorized User should also be reported to Customer Services:

Office of General Services New York State Procurement Customer Services Coordination 38th Floor Corning Tower Empire State Plaza Albany, NY 12242	Tel: 518-474-6717 Fax: 518-474-2437 E-mail: customer.services@ogs.ny.gov

II.18 BASIC WARRANTY

See "*Additional Warranties*" in Appendix B, §72.

Normal wear and tear items will be warranted in accordance with Manufacturer's Standard Warranty.

The Contractor shall warrant the vehicle and furnished equipment against parts failure or malfunction due to design, construction or installation errors, defective workmanship, and missing or incorrect parts. Where Options are to be supplied, they must be compatible with the rest of the product.

The manufacturer's standard warranty will apply.

Warranties shall be honored by all the manufacturer's dealers in New York State.

The warranty period for all coverage shall begin on the date vehicle is accepted or put in service, whichever occurs later.

Where vehicles develop chronic failures during the warranty period, Contractor shall extend the warranty period for an equal period of time following correction of such failures, as indicated in the original warranty.

II.19 ADVERTISING

In addition to the requirements set forth in Appendix B, §20 *Advertising Results*, any Contractor advertisements, promotional literature and/or contract description(s) of contract awards must be reviewed and approved by the Office of General Services, NYSPro prior to issuance. Contractor may not advertise its name on the vehicle.

II.20 OVERLAPPING CONTRACT ITEMS

Products/services available in the resulting contract may also be available from other New York State contracts. Authorized Users will be advised to select the most cost effective procurement alternative that meets their program requirements and to maintain a procurement record documenting the basis for this selection.

II.21 IRAN DIVESTMENT ACT

By entering into this Contract, Contractor certifies that it is not on the "Entities Determined To Be Non-Responsive Offerers Pursuant to The New York State Iran Divestment Act of 2012" list ("Prohibited Entities List") posted on the OGS website at: http://www.ogs.ny.gov/about/regs/docs/ListofEntities.pdf and further certifies that it will not utilize on such Contract any subcontractor that is identified on the Prohibited Entities List. Contractor agrees that should it seek to renew or extend this Contract, it must provide the same certification at the time the Contract is renewed or extended. Contractor also agrees that any proposed Assignee of the Contract will be required to certify that it is not on the Prohibited Entities List before OGS may approve a request for Assignment of Contract.

During the term of the Contract, should OGS receive information that a person (as defined in State Finance Law §165-a) is in violation of the above-referenced certifications, OGS will review such information and offer the person an opportunity to respond. If the person fails to demonstrate that it has ceased its engagement in the investment activity which is in violation of the Act within 90 days after the determination of such violation, then OGS shall take such action as may be appropriate and provided for by law, rule, or contract, including, but not limited to, seeking compliance, recovering damages, or declaring the Contractor in default.

OGS reserves the right to reject any request for renewal, extension, or assignment for an entity that appears on the Prohibited Entities List prior to the renewal, extension, or assignment of the Contract, and to pursue a responsibility review with Contractor should it appear on the Prohibited Entities List hereafter.

II.22 PARTICIPATION BY MINORITY GROUP MEMBERS AND WOMEN WITH RESPECT TO STATE CONTRACTS: REQUIREMENTS AND PROCEDURES

I. General Provisions

A. OGS is required to implement the provisions of New York State Executive Law Article 15-A and 5 NYCRR Parts 142-144 ("MWBE Regulations") for all State contracts as defined therein, with a value (1) in excess of $25,000 for labor, services, equipment, materials, or any combination of the foregoing or (2) in excess of $100,000 for real property renovations and construction.

B. The Contractor agrees, in addition to any other nondiscrimination provision of the Contract and at no additional cost to OGS, to fully comply and cooperate with OGS in the implementation of New York State Executive Law Article 15-A. These requirements include equal employment opportunities for minority group members and women ("EEO") and contracting opportunities for New York State Certified minority and women-owned business enterprises ("MWBEs"). Contractor's demonstration of "good faith efforts" pursuant to 5 NYCRR §142.8 shall be a part of these requirements. These provisions shall be deemed supplementary to, and not in lieu of, the nondiscrimination provisions required by New York State Executive Law Article 15 (the "Human Rights Law") or other applicable federal, state or local laws.

C. Failure to comply with all of the requirements herein may result in a finding of non-responsiveness, non-responsibility and/or a breach of contract, leading to the withholding of funds, suspension or termination of the Contract or such other actions or enforcement proceedings as allowed by the Contract.

II. Contract Goals

For purposes of this procurement, OGS conducted a comprehensive search and determined that this contract does not offer sufficient opportunities to set goals for participation by MWBEs as subcontractors,

service providers and suppliers to Contractor. Contractor is however encouraged to make every good faith effort to promote and assist the participation of MWBEs on this Contract for the provision of services and materials. To locate MWBEs, the Directory of Certified Businesses can be viewed at: http://www.esd.ny.gov/MWBE/directorySearch.html

III. Equal Employment Opportunity (EEO)

A. Contractor agrees to be bound by the provisions of New York State Executive Law Article 15-A and the MWBE Regulations promulgated by the Division of Minority and Women's Business Development of the Department of Economic Development (the "Division"). If any of these terms or provisions conflict with applicable law or regulations, such laws and regulations shall supersede these requirements.

B. Contractor shall comply with the following provisions of Article 15-A:

a) Contractor and Subcontractors shall undertake or continue existing EEO programs to ensure that minority group members and women are afforded equal employment opportunities without discrimination because of race, creed, color, national origin, sex, age, disability or marital status. For these purposes, EEO shall apply in the areas of recruitment, employment, job assignment, promotion, upgrading, demotion, transfer, layoff, or termination and rates of pay or other forms of compensation.

b) The Contractor shall:

1) Submit an EEO policy statement to OGS with the bid, or

2) If Contractor does not have an existing EEO policy statement, the Contractor shall sign and submit Appendix D, Minority and Women-Owned Business Enterprises and Equal Employment Opportunity Policy Statement, annexed hereto; or

3) Contractor shall certify and affirm that the text set forth in clause 12 of Appendix A, attached hereto and made a part hereof, is Contractor's equal employment opportunity policy.

c) The Contractor's EEO policy statement shall include the following language:

1) The Contractor will not discriminate against any employee or applicant for employment because of race, creed, color, national origin, sex, age, disability or marital status, will undertake or continue existing EEO programs to ensure that minority group members and women are afforded equal employment opportunities without discrimination, and shall make and document its conscientious and active efforts to employ and utilize minority group members and women in its work force.

2) The Contractor shall state in all solicitations or advertisements for employees that, in the performance of the contract, all qualified applicants will be afforded equal employment opportunities without discrimination because of race, creed, color, national origin, sex, age, disability or marital status.

3) The Contractor shall request each employment agency, labor union, or authorized representative of workers with which it has a collective bargaining or other agreement or understanding, to furnish a written statement that such employment agency, labor union, or representative will not discriminate on the basis of race, creed, color, national origin, sex age, disability or marital status and that such union or representative will affirmatively cooperate in the implementation of the Contractor's obligations herein.

4) The Contractor will include the provisions of Subdivisions (a) through (c) of this Subsection 3 and Paragraph "E" of this Section II, which provides for relevant provisions of the Human Rights Law, in every subcontract in such a manner that the requirements of the subdivisions will be binding upon each subcontractor as to work in connection with the Contract.

C. To ensure compliance with this Section, the Contractor shall submit Form EEO 100- Staffing Plan to document the composition of the proposed workforce to be utilized in the performance of the Contract

by the specified categories listed, including ethnic background, gender, and Federal occupational categories. Contractor shall complete the Staffing plan form and submit it as part of their contract.

D. Form EEO 101 - Workforce Employment Utilization Report ("Workforce Report")

Contractor and OGS agree that Contractor is unable to separate out the workforce utilized in the performance of the Contract from Contractor's and/or subcontractor's total workforce and that the information provided on the previously submitted Staffing Plan is Contractor's total workforce during the subject time frame, not limited to work specifically under the contract.

CONTRACTOR SHALL COMPLY WITH THE PROVISIONS OF THE HUMAN RIGHTS LAW, ALL OTHER STATE AND FEDERAL STATUTORY AND CONSTITUTIONAL NON-DISCRIMINATION PROVISIONS. CONTRACTOR AND SUBCONTRACTORS SHALL NOT DISCRIMINATE AGAINST ANY EMPLOYEE OR APPLICANT FOR EMPLOYMENT BECAUSE OF RACE, CREED (RELIGION), COLOR, SEX, NATIONAL ORIGIN, SEXUAL ORIENTATION, MILITARY STATUS, AGE, DISABILITY, PREDISPOSING GENETIC CHARACTERISTIC, MARITAL STATUS OR DOMESTIC VIOLENCE VICTIM STATUS, AND SHALL ALSO FOLLOW THE REQUIREMENTS OF THE HUMAN RIGHTS LAW WITH REGARD TO NON-DISCRIMINATION ON THE BASIS OF PRIOR CRIMINAL CONVICTION AND PRIOR ARREST.

II.23 GENERAL REQUIREMENTS

The State will not be liable for any expense incurred by the Contractor for any parking fees or as a consequence of any traffic infraction or parking violations attributable to employees of the Contractor.

For reasons of safety and public policy, in any contract resulting from this procurement, the use of illegal drugs and/or alcoholic beverages by the Contractor or its personnel shall not be permitted while performing any phase of the work herein specified.

II.24 REPORT OF CONTRACT USAGE

Contractor shall furnish a report of all vehicles provided under the Contract during each quarterly period, no later than the 15th of the month following the close of each quarter. Purchases by Non-state agencies, political subdivisions and others authorized by law shall be reported in the same report and indicated as required. A template for such report is included In Appendix C, Light Duty Vehicles Including Law Enforcement (Statewide) Documents, Number 3, Report of Contract Usage. All fields of information shall be accurate and complete. The report is to be submitted electronically via electronic mail utilizing the template provided in Microsoft Excel 2003, or newer (or as otherwise directed by OGS), to the attention of the individual shown on the front page of the Contract Award Notification and shall reference the Group Number, Award Number, Contract Number, Sales Period, and Contractor's (or other authorized agent) Name, and all other fields required.

II.25 CONTRACTOR INSURANCE REQUIREMENTS

Contractor shall comply with Contractor Insurance Requirements as set forth in Appendix C, Light Duty Vehicles Including Law Enforcement (Statewide) Documents, Number 5, Contractor Insurance Requirements.

SECTION III. SPECIAL TERMS AND CONDITIONS

III.1 EQUIPMENT TO BE FURNISHED WITH AN ITEM

All standard equipment which is provided by the OEM with an Item shall be furnished unless such equipment is expressly deleted by OGS or is specified to be other than standard. When Optional equipment is specified, all components listed in the OEM's data book as being included with the Option shall be furnished.

Everything that is provided as standard by the OEM with the make/model bid must be included, regardless of whether the specification calls for the item or not.

All items required by this solicitation must be factory installed. In the event an item is unavailable from the factory, OGS must be notified and approval of a non-factory item must be requested.

III.1.1 INSTRUCTION MANUALS

Simultaneous with delivery, the Contractor(s) shall furnish to the Authorized User, upon request, a complete instruction manual for the product and for each component supplied. The manual shall include complete instructions for unpacking, inspecting, installing, adjusting, aligning, and operating the product, together with layout and interconnection diagrams, schematic and wiring diagrams, preventive and corrective maintenance procedures, and complete parts lists, manufacturer's catalog numbers, and ordering information, if applicable.

III.1.2 OPERATOR'S MANUAL

The Contractor shall furnish one operator's manual with each vehicle.

III.2 MOTOR VEHICLE REGULATIONS

Each vehicle delivered shall comply with all applicable laws, regulations and directives of New York State and the Federal Government in effect on the date of manufacture.

III.3 EMISSIONS CONTROLS

Vehicles and engines shall comply with all applicable Federal, State and Local laws, regulations and directives in effect on the date of manufacture.

III.4 DMV INSPECTION

All vehicles in LOTS I, II, III, and IV only, must be delivered with complete NYS Inspections. In the event that a vehicle is delivered uninspected, $250 will be deducted from the invoice by the Authorized User to cover the cost of the inspection and to compensate for time. The State reserves the right to cancel a Contract and/or take other action if vehicles are not properly inspected or if the New York State Department of Motor Vehicles inspection sticker is not properly affixed to a vehicle. This section does not apply to vehicles in Lot V.

III.5 PRICE SHEETS AND CATALOGS

Contractor shall be required to furnish, without charge, catalog and nationally published price lists identical to those accepted with their bid, including any changes (additions, deletions, etc.) pursuant to the contract, to Authorized Users who request them.

Catalogs and nationally published price lists may be furnished to Authorized Users in either hard-copy or electronic format. If available in both formats, they shall be furnished in the format preferred by the requesting Authorized User. Upon request, the Contractor shall assist Authorized Users in the use of catalogs and nationally published price lists.

III.6 OPTIONS

The percent discount for Options shall be applied to the MSRP to yield a Contract price for the Option. The Contract price for OEM Options shall include any and all labor, installation, fittings, connections, etc., that might be needed to attach the Option to the vehicle so that the Option operates to the Option's full design capabilities; there shall be no additional up-charges, fees, etc., for adding OEM Options. If an Option for the vehicle is from a Non-OEM provider the Contractor may add normal, published labor rates, to install such Option and, labor shall not be more than what is charged to the public at large.

If the Contractor sells an Option, OEM or Non-OEM, to the public at large with pricing that is lower than the application of the Contract discount from the MSRP, then the price that is charged to the public at large shall be charged to Authorized Users. This shall be clearly shown on the invoice as a "Special Value" or by some other phrase or identifying designation.

III.6.1 OPTIONS, ACCESSORIES, EQUIPMENT, ETC., TO BE ADDED OR DELETED FROM VEHICLES

Authorized Users may purchase the vehicle awarded and choose to have Options, accessories, equipment, features, products, etc., (hereafter referred to as "Options") added or deleted. Such Options will generally be considered OEM, but may be from other suppliers that the OEM may utilize and/or may be considered part of the OEM's standard line of products for the vehicle involved. The Options would normally be readily available from the "factory" when the OEM is building the vehicle and would normally be expected to be listed in the OEM's offering of Options. Such Options would be expected to be listed in vehicle publications such as the "PC Car Book".

A. DELETIONS

It is anticipated that Authorized Users may delete Options that have been required by the solicitation's specifications for the base vehicle involved. Contractors will be required to honor all such deletions.

When an Option is being deleted, the Contractor must give the Authorized User proof of the Contractor's full cost (invoice price from OEM) of the Option, as shown in the PC Car Book. If the Option is not in the PC Car Book, the Contractor must provide documentation showing the Contractor's cost for the Option.

Any deletion must clearly be shown on invoice and clearly show cost deduction.

B. ADDITIONS

It is anticipated that Authorized Users may add Options above and beyond that which have been required by the solicitation's specifications for the vehicle involved. Contractor shall be required to honor all such additions.

When an Option is being added, the Contractor must give the Authorized User proof of the MSRP of the Option, as shown in the PC Car Book. If the Option is not in the PC Car Book, the Contractor must provide documentation showing the Contractor's price for the Option from the vendor's catalog.

The percent discount bid as shown in the Contract shall be applied to the MSRP to yield a net/Contract price for the Option. The percent discount shall be understood to include and account for any and all labor, installation, fittings, connections, etc., that might be needed to attach the Option to the vehicle so that it operates to its full design capabilities; there shall be no additional up-charges, fees, etc., for adding OEM Options.

Any addition must clearly show on invoice and clearly show the MSRP, the application of <u>the percent discount</u> for Options and the resultant contract price.

III.6.2 ADDITION OF NON-OEM OPTION PROVIDER AFTER CONTRACT AWARD

The Contractor may offer Non-OEM Options from Non-OEM providers not included under the Contract only with prior-approval from NYSPro. The Contractor must submit a written request for the addition of Non-OEM provider(s) to the NYSPro Contract administrator that includes, at a minimum,

A. The Non-OEM Option provider name;

B. The Non-OEM Option manufacturer name and price list for the non-OEM Options; and

C. An explanation for the addition of the Non-OEM provider to the Contract that includes the Authorized User(s) who have requested the Non-OEM Options, and a description of the non-OEM Options requested.

III.6.3 DOT OPTIONAL PACKAGE

Authorized Users may purchase the DOT Optional Package for Items 3 through 15 in Lot I and Items 10 through 18 in Lot II. Contractor shall provide the DOT Optional Package at the price set forth in Appendix C, Light Duty Vehicles Including Law Enforcement (Statewide) Documents, Number 2, Price Pages, for these Items. When a DOT Optional Package is specified, it shall meet the following requirements:

A. Dupont Chrome Yellow 6578X, School Bus Yellow or manufacturer's equal.

B. **Cab Protector Screen:**

1. Pick up - WeatherGuard No. 1 906-X or equal painted to match the truck cab.
2. Cargo Van Bulkhead - WeatherGuard No.86000-X (full size van)/87000-X (mini van) or equal. **No bulkhead required for Passenger van unless specified**.

C. LED Amber Flashing Beacons - Federal Signal Model Federal Signal flashing light part #252650-02NYSDOT **or** Star Warning Systems flashing part #255HTCL-A-NY **or** Whelen flashing part #L21-NYS.

LED Amber Flashing Beacons shall be controlled by a fused/breakered, pilot lighted and labeled (no Dymo tape) switch mounted in the dash.

Pick-up Trucks/Suburbans/Large Vans:

Dual flashing LED beacons affixed to the vehicle roof.

Mounting specifics:

1. **Pick-up truck:** left & right side mounted, if so equipped cab shield/protector mounted.
2. **Suburbans / Large vans:** forward & rear roof mounted.

Minivans (Passenger Vehicles):

Single flashing LED beacon center mounted on the forward top of the cab.

D. Striping on the Front Bumper (if painted) and Rear Doors or tailgate -

1. DuPont DuLux Blue - Six (6) inch wide, eighteen (18) inch on center at 45 degrees with a minimum of four (4) stripes DuPont DuLux 6014 Blue. See diagram on next page.
2. 3M Blue Tape - As 4a except utilizing retro-reflective blue, yellow or blue and yellow stripes (3M 580-75 / Scotchlite 680-75 or equal) six (6) inch wide reflective tape/sheeting.

E. Fire Extinguisher - 2.5 pound dry chemical ABC rated with mounting bracket.

F. Three-piece Triangle "Flare" kit with storage box for roadside emergency use.

G. Vehicle Paint Striping as specified below.

VEHICLE PAINT STRIPING NYS DEPARTMENT OF TRANSPORTATION
FRONT VIEW (Bumper)

(Curbside) (Streetside)

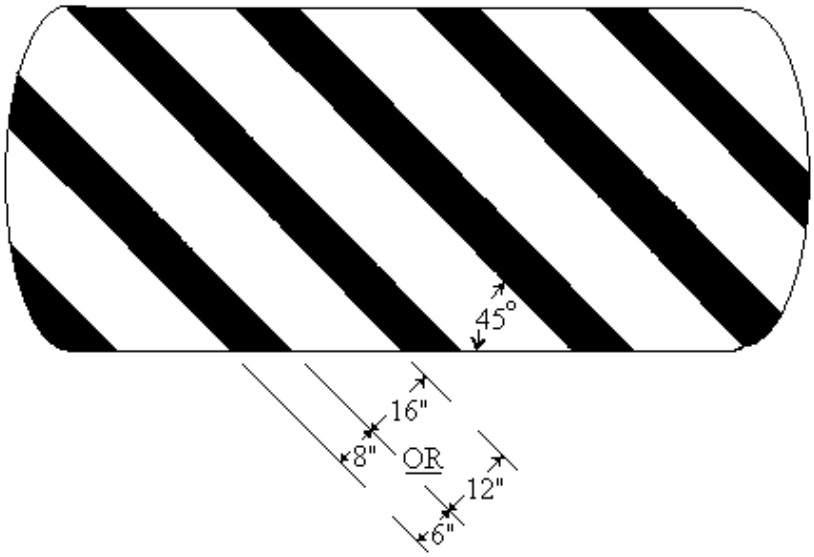

REAR VIEW (Tailgate, Stake-Racks, Van Door/s, Etc.)

(Streetside) (Curbside)

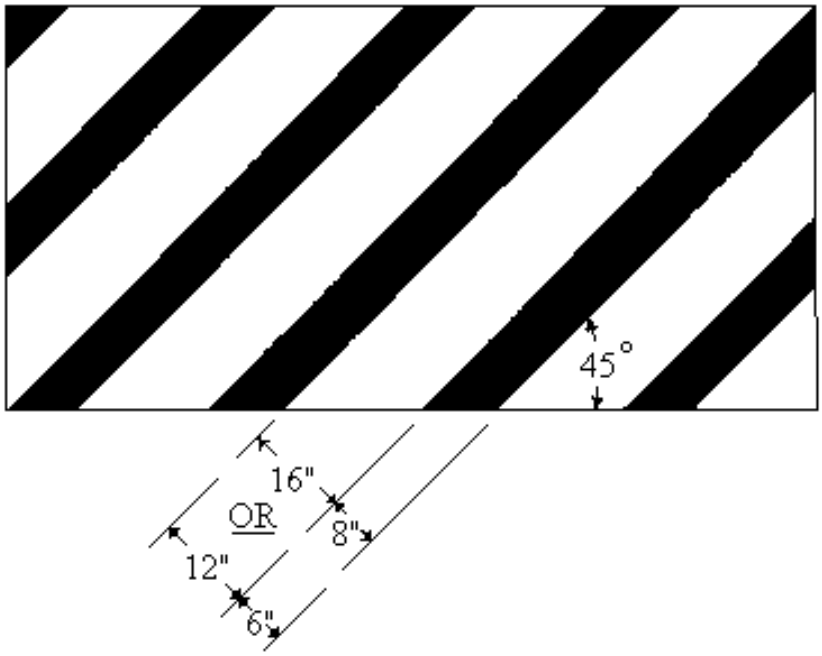

Units shall have 6" Wide Stripes (minimum) at 18" On Center

Door-Panel/s shall have (a minimum of) Four Stripes

III.7 REPLACEMENT VEHICLES

The State may permit the Contractor to offer a replacement model or a replacement product line if the model series or the product line originally awarded is discontinued, replaced, or made unavailable by the Original Equipment Manufacturer (OEM). The Unit Price for such replacement shall be determined in accordance with Section III.8.7 *Next Model Year and Replacement Vehicle Pricing*.

III.8 PRICE

The Unit Price for each Item is set forth in Appendix C, Light Duty Vehicles Including Law Enforcement (Statewide) Documents, Number 2, Price Pages.

Non-OEM Option providers, if any, are set forth in Appendix C, Light Duty Vehicles Including Law Enforcement (Statewide) Documents Number 4, Contractor Information.

In the event that an Item awarded to a Contractor has reached Final Order Due Date prior to Contract Award and is no longer available, Contractor shall provide the Item using next MY pricing, calculated in accordance with Section III.8.7 *Next Model Year and Replacement Vehicle Pricing*, or current MY pricing as set forth in Contractor's Bid, whichever is less.

The Manufacturer's Bid Assistance and/or Dealer Discount may be increased by Contractor at any time during the Contract term, but may not be decreased for the entire term of the contract.

III.8.1 UNIT PRICE FOR LOTS I, II, III, AND IV

The Unit Price for each Item shall include all customs duties and charges, all vehicle preparation and clean-up charges, New York State motor vehicle inspection, installation charges and all other incidentals normally included with providing and delivery of a vehicle, including the manufacturer's fees (e.g., destination charges). Delivery shall be FOB Destination.

Contractors will be required to deliver vehicles anywhere within New York State boundaries. However Authorized Users, at their sole discretion, may pick up vehicle(s) at Contractor or Courtesy Dealer locations and shall be given a Pick Up Credit as specified in by the Contractor in Appendix C, Light Duty Vehicles Including Law Enforcement (Statewide) Documents, Number 1, Price Pages. This credit shall be included as a separate line item on the Authorized User's invoice.

III.8.2 UNIT PRICE FOR LOT V

The Unit Price for each Item shall include all transportation costs. Vehicles shall be drop shipped directly from the factory to each New York State Police location. Delivery shall be FOB Destination. Delivery instructions will be detailed on the Purchase Order.

Dealer's new vehicle servicing preparation will be performed by New York State Police personnel, not the Contractor. In addition, DMV Inspection is NOT required for Items in Lot V. All matters pertaining to registration and licensing are the responsibility of the New York State Police, not the Contractor. Pricing for Items in Lot V shall not include any charge for new vehicle servicing preparation, registration, or licensing.

The New York State Police may stagger the delivery of these vehicles over a period of time. For example, order forty (40) vehicles per month with instructions to deliver four (4) vehicles to each of the ten (10) troops listed below over a period of time.

Following are the delivery locations for Items in Lot V:

NEW YORK STATE POLICE (STATEWIDE)

Troop A, Batavia, NY
Troop B, Ray Brook, NY
Troop C, Sidney, NY
Troop D, Oneida, NY
Troop E, Canandaigua, NY
Troop F, Middletown, NY
Troop G, Latham, NY
Troop K, Millbrook, NY
Troop L, East Farmingdale, NY
Troop T, Albany, NY

III.8.4 LOWER PRICING

The State reserves the right to negotiate lower pricing, or to advertise for bids, whichever is in the State's best interest as determined by the Commissioner, in the event of a significant decrease in market price of any product listed. In addition, if the Contractor's normal pricing to the public or to the trade in general is less than the net/contract pricing with the application of a contract discount, etc., then the normal pricing to the public or to the trade in general shall also be granted by Contractors to Authorized Users.

III.8.5 GOVERNMENT MANDATED PROGRAM PRICE ADJUSTMENT

An adjustment in price may be permitted if a government mandated program, (e.g., a new standard for emissions), takes effect and suitable documentation is furnished to the State and the State determines the requested price change is verifiable and is reasonable. Such a price adjustment may be permitted for only a limited time, since such an adjustment would eventually be reflected in the Factory Invoice Price.

III.8.6 DMV INSPECTION

Items in Lots I, II, III and IV must be delivered with complete NYS Inspections. See Section III.8.6 *DMV Inspection*.

III.8.7 NEXT MODEL YEAR AND REPLACEMENT VEHICLE PRICING

A. Next Model Year pricing shall be calculated by taking the new MY Factory Invoice Price (including all standard and Optional required equipment for each vehicle in the resultant contract(s)), and subtracting the Contractor's Manufacturer's Bid Assistance and Dealer Discount. The next Model Year Unit Price shall be calculated as follows:

	Old Model Year	New Model Year
Factory Invoice Price	$21,500.00	$22,000.00
Manufacturer's Bid Assistance	$3,000.00	$3,000.00
Dealer Discount (e.g. 4% of Factory Invoice) (may include Delivery cost for FOB Destination)	$860.00	$880.00
Unit Price (Factory Invoice Price minus Manufacturer's Bid Assistance and Dealer Discount)	$17,640.00	$18,120.00

This Unit Price would apply to all purchases for the Item, The next Model Year or replacement vehicle Unit Price for an Item shall not be effective until the date of NYSPro approval of the pricing for the next Model Year or replacement vehicle for the Item(s). See also Section II.16 *Contract Period and Renewals*, Section III.6.1 *Options, Accessories, Equipment, Etc., to be Added or Deleted from Vehicles*, and Section II.9 *Purchase Orders and Invoicing*.

B. In the event that the State permits the Contractor to offer a replacement model or a replacement product line if the model series or the product line originally awarded is discontinued, replaced, or made unavailable by the OEM pursuant to Section III.7 *Replacement Vehicles*, the Unit Price for such replacement shall also be calculated as described in "A" above.

C. In order to receive approval for next Model Year or replacement vehicle pricing for an Item, the Contractor must submit the following to NYSPro upon request:

1. Updated Price Pages for the resultant Contract, in Excel format, with pricing updated to reflect the next Model Year or replacement vehicle pricing;
2. A Dealer Invoice for the Item;
3. OEM Vehicle Specifications for the next Model Year or replacement vehicle; and

OGS reserves the right to request additional information that may be needed in order to determine that the next Model Year or replacement vehicle meets the minimum Item specifications as set forth in the resultant contract(s).

III.9 DELIVERY

Delivery shall be expressed in number of calendar days required to make delivery after receipt of a Purchase Order (After Receipt of Order ("ARO")). Product is required as soon as possible. Additionally, pursuant to Appendix B, §47, Shipping/Receipt of Product, freight terms are FOB Destination.

Delivery shall be made in accordance with instructions on Purchase Order from each Authorized User. If there is a discrepancy between the Purchase Order and what is listed on the Contract, it is the Contractor's obligation to seek clarification from the ordering Authorized User and, if applicable, from OGS NYSPro. For Lot V Items, the Contractor shall make prior arrangements with the State Police before any deliveries are made.

III.9.1 EXPANSION OF DELIVERY POINTS

Upon mutual agreement, delivery locations may be expanded per Section II.13 *Non-State Agencies Participation in Centralized Contracts*, II.17 *Extension of Use* and II.18 *Extension of Use Commitment*, incorporated herein.

III.9.2 CONDITION ON DELIVERY

If a vehicle is delivered with minor deviations or improper servicing, the Contractor must arrange to have the necessary work done within 48 hours (exclusive of Saturdays, Sundays and Federal or NYS Holidays) after receipt of written notification from the Authorized User and/or the Office of General Services. If Contractor cannot arrange to have the necessary work done within such time period, the corrections shall be made by an entity of the Authorized User's choosing and Contractor will be required to reimburse the Authorized User for this expense within 30 calendar days of request.

No name other than the manufacturers shall appear on the vehicle.

At point of acceptance, the vehicle odometer reading shall not exceed, in miles, the distance between the Contractor's or Courtesy Delivery Dealer's place of business and the point of delivery plus 50 miles. In the event a vehicle is delivered with mileage exceeding such amount, $5.00 for each mile up to 100 miles and $10.00 each mile over 100 miles will be deducted from each Invoice. Vehicles exceeding the aforementioned miles by more than 300 miles may be rejected.

III.9.3 DELIVERY CERTIFICATION

Contractor shall secure a signed receipt from the Authorized User certifying delivery of vehicle and odometer reading. In the event deficiencies are later noted and a properly signed receipt cannot be found, Contractor will be responsible for certifying delivery and odometer reading.

III.9.4 SHIPPING DATES AND DELIVERY TIME

The following provisions for Shipping Dates and Delivery Time shall apply:

A. Contractor shall provide written acknowledgement of orders within five (5) business days after receipt of order.

B. Contractor shall provide ordering Authorized User with anticipated shipping date of completed vehicle with written acknowledgement of order.

C. Contractor shall furnish the Authorized User with written acknowledgement of the shipping date at least 14 calendar days prior to shipment.

D. If shipment will not be made within the delivery time, the Contractor is required to notify the Authorized User in writing at least 14 calendar days prior to the latest date of the original delivery obligation. This

notification must include the reasons for the delay and the latest date the vehicle will be shipped. Should the delay not be acceptable to the Authorized User, appropriate contract default proceedings will be initiated under Section III.9.5, *Default On Delivery*. Failure to supply timely written notification of delay may be cause for default proceedings.

E. All correspondence on shipping dates and delivery time shall be directed to the ordering Authorized User's contact person.

III.9.5 DEFAULT ON DELIVERY

If during the Contract period an Authorized User has issued a Purchase Order on or before Final Order Due Date for an Item, and that Item becomes unavailable or cannot be supplied for any reason (except as provided for in Appendix B §61 *Savings/Force Majeure*), following the issuance of the Purchase Order, a substitute Item deemed by NYSPro to be equal to the specifications for the Item in the resultant contract(s), must be supplied by Contractor if requested by the Authorized User. If a Current Model Year substitute vehicle is not available or not deemed equal to the specifications for the Item in the resultant contract(s), then Contractor must supply a similar vehicle from the next Model Year that meets the specifications for the Item in the resultant contract(s). The price for substitute vehicles shall be equal to or less than the Unit Price for the vehicle in the resultant contract(s).

Section III.8.7 *Next Model Year and Replacement Vehicle Pricing* does not apply to substitute vehicles provided under this section.

Alternatively, the Authorized User may, at their sole discretion, cancel the order and purchase the vehicle from other sources. In such event the Contractor shall reimburse the Authorized User for all excess costs over the NYS net contract price .

III.9.6 LIQUIDATED DAMAGES

In the event of a delay or default in any delivery the Authorized User shall be entitled to and shall assess against the Contractor as liquidated damages and not by way of penalty, a sum calculated as follows:

Ten dollars per day per vehicle to compensate for delay, and other loses, detriments and inconveniences attendant upon such delay from the end of the grace period commencing from the time delivery was due under the contract. A grace period of seven calendar days commencing on and including the contract date for delivery shall be extended to the vendor prior to the assessment of such liquidated damages. Notice is hereby given to the vendor that despite the extensions of the grace period herein specified - TIME SHALL BE AND IS OF THE ESSENCE IN REGARD TO DELIVERY OF THE VEHICLES.

Liquidated damages, if assessed, shall be deducted from the purchase order price for each vehicle delivered against such purchase order.

III.10 SERVICE

PRIOR DELIVERY SERVICING

Prior service by authorized representatives of the vehicle and equipment manufacturers must be available within New York State.

For Lot I, II III and IV Items only, prior to delivery, each vehicle shall be completely serviced by the Contractor or by an authorized dealer of the manufacturer in a modern, properly equipped service shop. Service shall include not less than the following:

- Lubrication,
- Wash,
- Engine tune-up,
- Wheel alignment,
- NY State Inspection,
- Body condition, and
- All other checks and adjustments required for proper complete servicing of a new vehicle.

Particular attention shall be given to door alignment, weather stripping, hardware, paint condition and tagging of cooling system. It shall be the Contractor's responsibility to ensure at that time that all components and accessories specified have been properly installed.

Lot V vehicles do NOT require prior-delivery servicing.

POST DELIVERY SERVICING – ALL LOTS

Post delivery service by authorized representatives of the vehicle and equipment manufacturers must be available within New York State for Items in all Lots. Post delivery service shall be performed in a modern, properly equipped service shop.

III.11 PILOT MODEL FOR LOT V

If requested in writing by the New York State Police, Contractor shall provide as directed a pilot model vehicle for inspection for Items in Lot V. The inspection, if requested by the New York State Police, shall be conducted at the manufacturer's assembly plant or up-fit facility. The New York State Police can request one vehicle inspection per pilot model. Contractor will be responsible for the reimbursement of all costs incurred by up to two NYS representatives to travel to the inspection site. Reimbursement for meals and lodging will be on a per diem basis in accordance with the employee's negotiating unit agreements. There is a set per diem allowance for meals, lodging and incidentals regardless of where lodging was obtained. These rates can be found on the Federal website http://www.gsa.gov/portal/category/21287. The Contractor shall make no other deliveries under the Contract until notified, in writing, that the pilot model is approved. The pilot model shall be ready for inspection within 45 calendar days after ordering date. The New York State Police reserves the right to drive the pilot model(s) from the point of manufacture to the destination point.

III.12 AVAILABILITY

Vehicles may be sold from existing stock if they are in compliance with the contract specifications and pricing. In no way shall Options be added to these vehicles without the consent of the ordering Authorized User. In all cases Option pricing shall be in accordance with contract requirements.

"Demos," "Used" or prior Model Year vehicles shall not be sold without the prior written approval of NYSPro.

Contractors should not pre-order vehicles for the contract with Options or Option packages not typically purchased under this contract. Authorized Users are encouraged to contact NYSPro if they are being asked to purchase vehicles from pre-existing stock that contain numerous Options in lieu of normal contract vehicles.

III.13 RECALLS

The Contractor must immediately notify NYSPro of any recalls pertaining to Contract vehicles.

III.14 FORD FIN CODE NUMBER

New York State and Ford Motor Company have reached an understanding regarding Ford's FIN Code requirements. For further information, please contact Ford Motor Company Government Account Manager, Donald Cobb by telephone at 203-971-8672 or via email at dcobb@ford.com.

III.15 PERFORMANCE AND BID BONDS

There are no BONDS for this Contract. In accordance with Appendix B, §58 Performance/Bid Bond, the Commissioner of OGS has determined that no performance, payment or Bid bond, or negotiable irrevocable letter of credit or other form of security for the faithful performance of the Contract shall be required at any time during the Term for resulting Contracts.

III.16 DISPUTE RESOLUTION POLICY

It is the policy of Office of General Services New York State Procurement (NYSPro) to provide vendors with an opportunity to administratively resolve disputes, complaints or inquiries related to NYSPro bid solicitations or contract awards. NYSPro encourages vendors to seek resolution of disputes through consultation with NYSPro staff. All such matters will be accorded impartial and timely consideration. Interested parties may also file formal written disputes. A copy of NYSPro's Dispute Resolution Procedures for Vendors may be obtained by contacting the person shown on the front of this Invitation for Bids or through the OGS website (http://ogs.ny.gov/BU/PC/BizInfo.asp, (click on Dispute Resolution Procedures).

III.17 CAPTIONS

The captions contained in this Contract are intended for convenience and reference purposes only and shall in no way be deemed to define or limit any provision thereof.

III.18 SEVERABILITY

If any provision of this Contract is deemed invalid or unenforceable, such determination shall have no effect on the balance of the Contract, which shall be enforced and interpreted as if such provision was never included in the Contract.

III.19 COUNTERPARTS

This Agreement may be executed in one or more counterparts, each of which shall be deemed to be an original, but all of which together shall constitute the same Agreement. Any signature page of any such counterpart may be attached or appended to any counterpart to complete a fully executed counterpart of this Agreement shall bind such party.

III.20 ENTIRE AGREEMENT

This Contract and the referenced appendices constitute the entire agreement between the parties thereto and no statement, promise, condition, understanding, inducement or representation, oral or written, expressed or implied, which is not contained herein shall be binding or valid and the Contract shall not be changed, modified or altered in any manner except by an instrument in writing executed by the State and the Contractor, with the approval of the Attorney General and the Comptroller for the State of New York. Authorized Users shall not have the authority to modify the terms of the Contract, except as to better terms and pricing for a particular procurement than those set forth herein in accordance with the terms set forth in Appendix B Clauses 40, Modification of Contract Terms, and 44, Purchase Orders.

IN WITNESS WHEREOF, the parties have executed this Agreement as of the date first written above.

The parties further hereby certify that original copies of this executed and approved signature page will be affixed to exact copies of this Agreement being executed simultaneously herewith.

CONTRACTOR

Signature: _____

Printed Name: MICHAEL HOPKINS

Title: SPECIALTY VEHICLE SALES

Company Name: JOE BASIL CHEVROLET, INC

Federal ID: 16-1068991

NYS Vendor ID 1100005392

THE PEOPLE OF THE STATE OF NEW YORK

Signature: Sharon M Buck

Printed Name: Sharon Buck

Title: Assistant Director - NYSPRO

Office of General Services

The acknowledgment must be fully and properly executed by an authorized person. By signing you certify your express authority to sign on behalf of yourself, your company, or other entity and full knowledge and acceptance of this agreement, Appendix A (Standard Clauses For New York State Contracts), Appendix B (OGS General Specifications), and State Finance Law §139-j and §139-k (Procurement Lobbying), and that all information provided is complete, true and accurate. By signing, bidder affirms that it understands and agrees to comply with the OGS procedures relative to permissible contacts as required by State Finance Law §139-j (3) and §139-j (6) (b).

INDIVIDUAL, CORPORATION, PARTNERSHIP, OR LLC ACKNOWLEDGMENT

STATE OF NEW YORK }

: **Sworn Statement:**

COUNTY OF ERIE }

On the 9TH day of DECEMBER in the year 2013, before me personally appeared MICHAEL HOPKINS, known to me to be the person who executed the foregoing instrument, who, being duly sworn by me did depose and say that _he maintains an office at JOE BASIL CHEVROLET, INC and further that:

[Check One]

(☐ **If an individual):** _he executed the foregoing instrument in his/her name and on his/her own behalf.

(☒ **If a corporation,** (☐ **a partnership,** ☐ **a limited liability company):** _he is the SPECIALTY VEHICLE SALES CONSULTANT of JOE BASIL CHEVROLET, INC., the *corporation/ partnership/ Limited Liability Company* described in the above instrument; that, _he is authorized to execute the foregoing instrument on behalf of the *corporation/ partnership/ Limited Liability Company* for purposes set forth therein; and that, pursuant to that authority, _he executed the foregoing instrument in the name of and on behalf of said *corporation/ partnership/ Limited Liability Company* as the act and deed of said *corporation/ partnership/ Limited Liability Company*.

TAYLOR JANE GRAJEK
Notary Public - State of New York
No. 01- GR6241268
Qualified in Erie County
My Commission Exp 5/16/2015

Signature of Notary Public

Notary Public Registration No. 01-GR6241268 **State** NY

APPENDIX A

STANDARD CLAUSES FOR NEW YORK STATE CONTRACTS

PLEASE RETAIN THIS DOCUMENT
FOR FUTURE REFERENCE.

December, 2012

TABLE OF CONTENTS

		Page
1.	Executory Clause	3
2.	Non-Assignment Clause	3
3.	Comptroller's Approval	3
4.	Workers' Compensation Benefits	3
5.	Non-Discrimination Requirements	3
6.	Wage and Hours Provisions	3
7.	Non-Collusive Bidding Certification	4
8.	International Boycott Prohibition	4
9.	Set-Off Rights	4
10.	Records	4
11.	Identifying Information and Privacy Notification	4
12.	Equal Employment Opportunities For Minorities and Women	4-5
13.	Conflicting Terms	5
14.	Governing Law	5
15.	Late Payment	5
16.	No Arbitration	5
17.	Service of Process	5
18.	Prohibition on Purchase of Tropical Hardwoods	5-6
19.	MacBride Fair Employment Principles	6
20.	Omnibus Procurement Act of 1992	6
21.	Reciprocity and Sanctions Provisions	6
22.	Compliance with New York State Information Security Breach and Notification Act	6
23.	Compliance with Consultant Disclosure Law	6
24.	Procurement Lobbying	7
25.	Certification of Registration to Collect Sales and Compensating Use Tax by Certain State Contractors, Affiliates and Subcontractors	7

STANDARD CLAUSES FOR NYS CONTRACTS

The parties to the attached contract, license, lease, amendment or other agreement of any kind (hereinafter, "the contract" or "this contract") agree to be bound by the following clauses which are hereby made a part of the contract (the word "Contractor" herein refers to any party other than the State, whether a contractor, licenser, licensee, lessor, lessee or any other party):

1. EXECUTORY CLAUSE. In accordance with Section 41 of the State Finance Law, the State shall have no liability under this contract to the Contractor or to anyone else beyond funds appropriated and available for this contract.

2. NON-ASSIGNMENT CLAUSE. In accordance with Section 138 of the State Finance Law, this contract may not be assigned by the Contractor or its right, title or interest therein assigned, transferred, conveyed, sublet or otherwise disposed of without the State's previous written consent, and attempts to do so are null and void. Notwithstanding the foregoing, such prior written consent of an assignment of a contract let pursuant to Article XI of the State Finance Law may be waived at the discretion of the contracting agency and with the concurrence of the State Comptroller where the original contract was subject to the State Comptroller's approval, where the assignment is due to a reorganization, merger or consolidation of the Contractor's business entity or enterprise. The State retains its right to approve an assignment and to require that any Contractor demonstrate its responsibility to do business with the State. The Contractor may, however, assign its right to receive payments without the State's prior written consent unless this contract concerns Certificates of Participation pursuant to Article 5-A of the State Finance Law.

3. COMPTROLLER'S APPROVAL. In accordance with Section 112 of the State Finance Law (or, if this contract is with the State University or City University of New York, Section 355 or Section 6218 of the Education Law), if this contract exceeds $50,000 (or the minimum thresholds agreed to by the Office of the State Comptroller for certain S.U.N.Y. and C.U.N.Y. contracts), or if this is an amendment for any amount to a contract which, as so amended, exceeds said statutory amount, or if, by this contract, the State agrees to give something other than money when the value or reasonably estimated value of such consideration exceeds $10,000, it shall not be valid, effective or binding upon the State until it has been approved by the State Comptroller and filed in his office. Comptroller's approval of contracts let by the Office of General Services is required when such contracts exceed $85,000 (State Finance Law Section 163.6-a). However, such pre-approval shall not be required for any contract established as a centralized contract through the Office of General Services or for a purchase order or other transaction issued under such centralized contract.

4. WORKERS' COMPENSATION BENEFITS. In accordance with Section 142 of the State Finance Law, this contract shall be void and of no force and effect unless the Contractor shall provide and maintain coverage during the life of this contract for the benefit of such employees as are required to be covered by the provisions of the Workers' Compensation Law.

5. NON-DISCRIMINATION REQUIREMENTS. To the extent required by Article 15 of the Executive Law (also known as the Human Rights Law) and all other State and Federal statutory and constitutional non-discrimination provisions, the Contractor will not discriminate against any employee or applicant for employment because of race, creed, color, sex, national origin, sexual orientation, age, disability, genetic predisposition or carrier status, or marital status. Furthermore, in accordance with Section 220-e of the Labor Law, if this is a contract for the construction, alteration or repair of any public building or public work or for the manufacture, sale or distribution of materials, equipment or supplies, and to the extent that this contract shall be performed within the State of New York, Contractor agrees that neither it nor its subcontractors shall, by reason of race, creed, color, disability, sex, or national origin: (a) discriminate in hiring against any New York State citizen who is qualified and available to perform the work; or (b) discriminate against or intimidate any employee hired for the performance of work under this contract. If this is a building service contract as defined in Section 230 of the Labor Law, then, in accordance with Section 239 thereof, Contractor agrees that neither it nor its subcontractors shall by reason of race, creed, color, national origin, age, sex or disability: (a) discriminate in hiring against any New York State citizen who is qualified and available to perform the work; or (b) discriminate against or intimidate any employee hired for the performance of work under this contract. Contractor is subject to fines of $50.00 per person per day for any violation of Section 220-e or Section 239 as well as possible termination of this contract and forfeiture of all moneys due hereunder for a second or subsequent violation.

6. WAGE AND HOURS PROVISIONS. If this is a public work contract covered by Article 8 of the Labor Law or a building service contract covered by Article 9 thereof, neither Contractor's employees nor the employees of its subcontractors may be required or permitted to work more than the number of hours or days stated in said statutes, except as otherwise provided in the Labor Law and as set forth in prevailing wage and supplement schedules issued by the State Labor Department. Furthermore, Contractor and its subcontractors must pay at least the prevailing wage rate and pay or provide the prevailing supplements, including the premium rates for overtime pay, as determined by the State Labor Department in accordance with the Labor Law. Additionally, effective April 28, 2008, if this is a public work contract covered by Article 8 of the Labor Law, the Contractor understands and agrees that the filing of payrolls in a manner consistent with Subdivision 3-a of Section 220 of the Labor Law shall be a condition precedent to payment by the State of

any State approved sums due and owing for work done upon the project.

7. NON-COLLUSIVE BIDDING CERTIFICATION. In accordance with Section 139-d of the State Finance Law, if this contract was awarded based upon the submission of bids, Contractor affirms, under penalty of perjury, that its bid was arrived at independently and without collusion aimed at restricting competition. Contractor further affirms that, at the time Contractor submitted its bid, an authorized and responsible person executed and delivered to the State a non-collusive bidding certification on Contractor's behalf.

8. INTERNATIONAL BOYCOTT PROHIBITION. In accordance with Section 220-f of the Labor Law and Section 139-h of the State Finance Law, if this contract exceeds $5,000, the Contractor agrees, as a material condition of the contract, that neither the Contractor nor any substantially owned or affiliated person, firm, partnership or corporation has participated, is participating, or shall participate in an international boycott in violation of the federal Export Administration Act of 1979 (50 USC App. Sections 2401 et seq.) or regulations thereunder. If such Contractor, or any of the aforesaid affiliates of Contractor, is convicted or is otherwise found to have violated said laws or regulations upon the final determination of the United States Commerce Department or any other appropriate agency of the United States subsequent to the contract's execution, such contract, amendment or modification thereto shall be rendered forfeit and void. The Contractor shall so notify the State Comptroller within five (5) business days of such conviction, determination or disposition of appeal (2NYCRR 105.4).

9. SET-OFF RIGHTS. The State shall have all of its common law, equitable and statutory rights of set-off. These rights shall include, but not be limited to, the State's option to withhold for the purposes of set-off any moneys due to the Contractor under this contract up to any amounts due and owing to the State with regard to this contract, any other contract with any State department or agency, including any contract for a term commencing prior to the term of this contract, plus any amounts due and owing to the State for any other reason including, without limitation, tax delinquencies, fee delinquencies or monetary penalties relative thereto. The State shall exercise its set-off rights in accordance with normal State practices including, in cases of set-off pursuant to an audit, the finalization of such audit by the State agency, its representatives, or the State Comptroller.

10. RECORDS. The Contractor shall establish and maintain complete and accurate books, records, documents, accounts and other evidence directly pertinent to performance under this contract (hereinafter, collectively, "the Records"). The Records must be kept for the balance of the calendar year in which they were made and for six (6) additional years thereafter. The State Comptroller, the Attorney General and any other person or entity authorized to conduct an examination, as well as the agency or agencies involved in this contract, shall have access to the Records during normal business hours at an office of the Contractor within the State of New York or, if no such office is available, at a mutually agreeable and reasonable venue within the State, for the term specified above for the purposes of inspection, auditing and copying. The State shall take reasonable steps to protect from public disclosure any of the Records which are exempt from disclosure under Section 87 of the Public Officers Law (the "Statute") provided that: (i) the Contractor shall timely inform an appropriate State official, in writing, that said records should not be disclosed; and (ii) said records shall be sufficiently identified; and (iii) designation of said records as exempt under the Statute is reasonable. Nothing contained herein shall diminish, or in any way adversely affect, the State's right to discovery in any pending or future litigation.

11. IDENTIFYING INFORMATION AND PRIVACY NOTIFICATION. (a) Identification Number(s). Every invoice or New York State Claim for Payment submitted to a New York State agency by a payee, for payment for the sale of goods or services or for transactions (e.g., leases, easements, licenses, etc.) related to real or personal property must include the payee's identification number. The number is any or all of the following: (i) the payee's Federal employer identification number, (ii) the payee's Federal social security number, and/or (iii) the payee's Vendor Identification Number assigned by the Statewide Financial System. Failure to include such number or numbers may delay payment. Where the payee does not have such number or numbers, the payee, on its invoice or Claim for Payment, must give the reason or reasons why the payee does not have such number or numbers.

(b) Privacy Notification. (1) The authority to request the above personal information from a seller of goods or services or a lessor of real or personal property, and the authority to maintain such information, is found in Section 5 of the State Tax Law. Disclosure of this information by the seller or lessor to the State is mandatory. The principal purpose for which the information is collected is to enable the State to identify individuals, businesses and others who have been delinquent in filing tax returns or may have understated their tax liabilities and to generally identify persons affected by the taxes administered by the Commissioner of Taxation and Finance. The information will be used for tax administration purposes and for any other purpose authorized by law. (2) The personal information is requested by the purchasing unit of the agency contracting to purchase the goods or services or lease the real or personal property covered by this contract or lease. The information is maintained in the Statewide Financial System by the Vendor Management Unit within the Bureau of State Expenditures, Office of the State Comptroller, 110 State Street, Albany, New York 12236.

12. EQUAL EMPLOYMENT OPPORTUNITIES FOR MINORITIES AND WOMEN. In accordance with Section 312 of the Executive Law and 5 NYCRR 143, if this contract is: (i) a written agreement or purchase order instrument, providing for a total expenditure in excess of $25,000.00,

whereby a contracting agency is committed to expend or does expend funds in return for labor, services, supplies, equipment, materials or any combination of the foregoing, to be performed for, or rendered or furnished to the contracting agency; or (ii) a written agreement in excess of $100,000.00 whereby a contracting agency is committed to expend or does expend funds for the acquisition, construction, demolition, replacement, major repair or renovation of real property and improvements thereon; or (iii) a written agreement in excess of $100,000.00 whereby the owner of a State assisted housing project is committed to expend or does expend funds for the acquisition, construction, demolition, replacement, major repair or renovation of real property and improvements thereon for such project, then the following shall apply and by signing this agreement the Contractor certifies and affirms that it is Contractor's equal employment opportunity policy that:

(a) The Contractor will not discriminate against employees or applicants for employment because of race, creed, color, national origin, sex, age, disability or marital status, shall make and document its conscientious and active efforts to employ and utilize minority group members and women in its work force on State contracts and will undertake or continue existing programs of affirmative action to ensure that minority group members and women are afforded equal employment opportunities without discrimination. Affirmative action shall mean recruitment, employment, job assignment, promotion, upgradings, demotion, transfer, layoff, or termination and rates of pay or other forms of compensation;

(b) at the request of the contracting agency, the Contractor shall request each employment agency, labor union, or authorized representative of workers with which it has a collective bargaining or other agreement or understanding, to furnish a written statement that such employment agency, labor union or representative will not discriminate on the basis of race, creed, color, national origin, sex, age, disability or marital status and that such union or representative will affirmatively cooperate in the implementation of the Contractor's obligations herein; and

(c) the Contractor shall state, in all solicitations or advertisements for employees, that, in the performance of the State contract, all qualified applicants will be afforded equal employment opportunities without discrimination because of race, creed, color, national origin, sex, age, disability or marital status.

Contractor will include the provisions of "a", "b", and "c" above, in every subcontract over $25,000.00 for the construction, demolition, replacement, major repair, renovation, planning or design of real property and improvements thereon (the "Work") except where the Work is for the beneficial use of the Contractor. Section 312 does not apply to: (i) work, goods or services unrelated to this contract; or (ii) employment outside New York State. The State shall consider compliance by a contractor or subcontractor with the requirements of any federal law concerning equal employment opportunity which effectuates the purpose of this section. The contracting agency shall determine whether the imposition of the requirements of the provisions hereof duplicate or conflict with any such federal law and if such duplication or conflict exists, the contracting agency shall waive the applicability of Section 312 to the extent of such duplication or conflict. Contractor will comply with all duly promulgated and lawful rules and regulations of the Department of Economic Development's Division of Minority and Women's Business Development pertaining hereto.

13. <u>CONFLICTING TERMS</u>. In the event of a conflict between the terms of the contract (including any and all attachments thereto and amendments thereof) and the terms of this Appendix A, the terms of this Appendix A shall control.

14. <u>GOVERNING LAW</u>. This contract shall be governed by the laws of the State of New York except where the Federal supremacy clause requires otherwise.

15. <u>LATE PAYMENT</u>. Timeliness of payment and any interest to be paid to Contractor for late payment shall be governed by Article 11-A of the State Finance Law to the extent required by law.

16. <u>NO ARBITRATION</u>. Disputes involving this contract, including the breach or alleged breach thereof, may not be submitted to binding arbitration (except where statutorily authorized), but must, instead, be heard in a court of competent jurisdiction of the State of New York.

17. <u>SERVICE OF PROCESS</u>. In addition to the methods of service allowed by the State Civil Practice Law & Rules ("CPLR"), Contractor hereby consents to service of process upon it by registered or certified mail, return receipt requested. Service hereunder shall be complete upon Contractor's actual receipt of process or upon the State's receipt of the return thereof by the United States Postal Service as refused or undeliverable. Contractor must promptly notify the State, in writing, of each and every change of address to which service of process can be made. Service by the State to the last known address shall be sufficient. Contractor will have thirty (30) calendar days after service hereunder is complete in which to respond.

18. <u>PROHIBITION ON PURCHASE OF TROPICAL HARDWOODS</u>. The Contractor certifies and warrants that all wood products to be used under this contract award will be in accordance with, but not limited to, the specifications and provisions of Section 165 of the State Finance Law, (Use of Tropical Hardwoods) which prohibits purchase and use of tropical hardwoods, unless specifically exempted, by the State or any governmental agency or political subdivision or public benefit corporation. Qualification for an exemption under this law will be the responsibility of the contractor to establish to meet with the approval of the State.

In addition, when any portion of this contract involving the use of woods, whether supply or installation, is to be performed by any subcontractor, the prime Contractor will indicate and certify in the submitted bid proposal that the subcontractor has been informed and is in compliance with specifications and provisions regarding use of tropical hardwoods as detailed in §165 State Finance Law. Any such use must meet with the approval of the State; otherwise, the bid may not be considered responsive. Under bidder certifications, proof of qualification for exemption will be the responsibility of the Contractor to meet with the approval of the State.

19. MACBRIDE FAIR EMPLOYMENT PRINCIPLES. In accordance with the MacBride Fair Employment Principles (Chapter 807 of the Laws of 1992), the Contractor hereby stipulates that the Contractor either (a) has no business operations in Northern Ireland, or (b) shall take lawful steps in good faith to conduct any business operations in Northern Ireland in accordance with the MacBride Fair Employment Principles (as described in Section 165 of the New York State Finance Law), and shall permit independent monitoring of compliance with such principles.

20. OMNIBUS PROCUREMENT ACT OF 1992. It is the policy of New York State to maximize opportunities for the participation of New York State business enterprises, including minority and women-owned business enterprises as bidders, subcontractors and suppliers on its procurement contracts.

Information on the availability of New York State subcontractors and suppliers is available from:

NYS Department of Economic Development
Division for Small Business
Albany, New York 12245
Telephone: 518-292-5100
Fax: 518-292-5884
email: opa@esd.ny.gov

A directory of certified minority and women-owned business enterprises is available from:

NYS Department of Economic Development
Division of Minority and Women's Business Development
633 Third Avenue
New York, NY 10017
212-803-2414
email: mwbecertification@esd.ny.gov
http://esd.ny.gov/MWBE/directorySearch.html

The Omnibus Procurement Act of 1992 requires that by signing this bid proposal or contract, as applicable, Contractors certify that whenever the total bid amount is greater than $1 million:

(a) The Contractor has made reasonable efforts to encourage the participation of New York State Business Enterprises as suppliers and subcontractors, including certified minority and women-owned business enterprises, on this project, and has retained the documentation of these efforts to be provided upon request to the State;

(b) The Contractor has complied with the Federal Equal Opportunity Act of 1972 (P.L. 92-261), as amended;

(c) The Contractor agrees to make reasonable efforts to provide notification to New York State residents of employment opportunities on this project through listing any such positions with the Job Service Division of the New York State Department of Labor, or providing such notification in such manner as is consistent with existing collective bargaining contracts or agreements. The Contractor agrees to document these efforts and to provide said documentation to the State upon request; and

(d) The Contractor acknowledges notice that the State may seek to obtain offset credits from foreign countries as a result of this contract and agrees to cooperate with the State in these efforts.

21. RECIPROCITY AND SANCTIONS PROVISIONS. Bidders are hereby notified that if their principal place of business is located in a country, nation, province, state or political subdivision that penalizes New York State vendors, and if the goods or services they offer will be substantially produced or performed outside New York State, the Omnibus Procurement Act 1994 and 2000 amendments (Chapter 684 and Chapter 383, respectively) require that they be denied contracts which they would otherwise obtain. NOTE: As of May 15, 2002, the list of discriminatory jurisdictions subject to this provision includes the states of South Carolina, Alaska, West Virginia, Wyoming, Louisiana and Hawaii. Contact NYS Department of Economic Development for a current list of jurisdictions subject to this provision.

22. COMPLIANCE WITH NEW YORK STATE INFORMATION SECURITY BREACH AND NOTIFICATION ACT. Contractor shall comply with the provisions of the New York State Information Security Breach and Notification Act (General Business Law Section 899-aa; State Technology Law Section 208).

23. COMPLIANCE WITH CONSULTANT DISCLOSURE LAW. If this is a contract for consulting services, defined for purposes of this requirement to include analysis, evaluation, research, training, data processing, computer programming, engineering, environmental, health, and mental health services, accounting, auditing, paralegal, legal or similar services, then, in accordance with Section 163 (4-g) of the State Finance Law (as amended by Chapter 10 of the Laws of 2006), the Contractor shall timely, accurately and properly comply with the requirement to submit an annual employment report for the contract to the agency that awarded

the contract, the Department of Civil Service and the State Comptroller.

24. PROCUREMENT LOBBYING. To the extent this agreement is a "procurement contract" as defined by State Finance Law Sections 139-j and 139-k, by signing this agreement the contractor certifies and affirms that all disclosures made in accordance with State Finance Law Sections 139-j and 139-k are complete, true and accurate. In the event such certification is found to be intentionally false or intentionally incomplete, the State may terminate the agreement by providing written notification to the Contractor in accordance with the terms of the agreement.

25. CERTIFICATION OF REGISTRATION TO COLLECT SALES AND COMPENSATING USE TAX BY CERTAIN STATE CONTRACTORS, AFFILIATES AND SUBCONTRACTORS.
To the extent this agreement is a contract as defined by Tax Law Section 5-a, if the contractor fails to make the certification required by Tax Law Section 5-a or if during the term of the contract, the Department of Taxation and Finance or the covered agency, as defined by Tax Law 5-a, discovers that the certification, made under penalty of perjury, is false, then such failure to file or false certification shall be a material breach of this contract and this contract may be terminated, by providing written notification to the Contractor in accordance with the terms of the agreement, if the covered agency determines that such action is in the best interest of the State.

APPENDIX B

GENERAL SPECIFICATIONS

PLEASE RETAIN THIS DOCUMENT FOR FUTURE REFERENCE

TABLE OF CONTENTS

GENERAL		PAGE
1.	Applicability	1
2.	Governing Law	1
3.	Ethics Compliance	1
4.	Conflict of Terms	1
5.	Definitions	1-3
BID SUBMISSION		
6.	International Bidding	3
7.	Bid Opening	3
8.	Bid Submission	3
9.	Facsimile Submissions	3
10.	Authentication of Facsimile Bids	4
11.	Late Bids	4
12.	Bid Contents	4
13.	Extraneous Terms	4
14.	Confidential/Trade Secret Materials	4
15.	Release of Bid Evaluation Materials	4
16.	Freedom of Information Law	5
17.	Prevailing Wage Rates - Public Works and Building Services Contracts	5
18.	Taxes	6
19.	Expenses Prior to Contract Execution	6
20.	Advertising Results	6
21.	Product References	6
22.	Remanufactured, Recycled, Recyclable Or Recovered Materials	6
23.	Products Manufactured in Public Institutions	6
24.	Pricing	6
25.	Drawings	7
26.	Site Inspection	7
27.	Procurement Card	7
28.	Samples	7
BID EVALUATION		
29.	Bid Evaluation	8
30.	Conditional Bid	8
31.	Clarification/Revisions	8
32.	Prompt Payment Discounts	8
33.	Equivalent or Identical Bids	8
34.	Performance and Responsibility Qualifications	8
35.	Disqualification for Past Performance	8
36.	Quantity Changes Prior To Award	8
37.	Timeframe for Offers	8
TERMS & CONDITIONS		
38.	Contract Creation/Execution	8
39.	Participation in Centralized Contracts	8
40.	Modification of Contract Terms	9
41.	Scope Changes	9
42.	Estimated/Specific Quantity Contracts	9

TERMS & CONDITIONS		PAGE
43.	Emergency Contracts	9
44.	Purchase Orders	9
45.	Product Delivery	10
46.	Weekend and Holiday Deliveries	10
47.	Shipping/Receipt of Product	10
48.	Title and Risk of Loss	10
49.	Re-Weighing Product	10
50.	Product Substitution	10
51.	Rejected Product	10
52.	Installation	10
53.	Repaired or Replaced Product/ Components	11
54.	On-Site Storage	11
55.	Employees/Subcontractors/Agents	11
56.	Assignment	11
57.	Subcontractors and Suppliers	11
58.	Performance/Bid Bond	11
59.	Suspension of Work	11
60.	Termination	11
61.	Savings/Force Majeure	12
62.	Contract Billings	12
63.	Default - Authorized User	12
64.	Interest on Late Payments	12
65.	Remedies for Breach	13
66.	Assignment of Claim	13
67.	Toxic Substances	13
68.	Independent Contractor	13
69.	Security	13
70.	Cooperation with Third Parties	13
71.	Contract Term - Renewal	13
72.	Additional Warranties	13
73.	Legal Compliance	15
74.	Indemnification	15
75.	Indemnification Relating to Third Party Rights	15
76.	Limitation of Liability	15
77.	Insurance	15
THE FOLLOWING CLAUSES PERTAIN TO TECHNOLOGY & NEGOTIATED CONTRACTS		
78.	Software License Grant	15
79.	Product Acceptance	17
80.	Audit of Licensed Product Usage	17
81.	Ownership/Title to Project Deliverables	17
82.	Proof of License	18
83.	Product Version	18
84.	Changes to Product or Service Offerings	18
85.	No Hardstop/Passive License Monitoring	19
86.	Source Code Escrow for Licensed Product	19

GENERAL

1. **APPLICABILITY** The terms and conditions set forth in this Appendix B are expressly incorporated in and applicable to the resulting procurement contracts let by the Office of General Services Procurement Services Group, or let by any other Authorized User where incorporated by reference in its Bid Documents. Captions are intended as descriptive and are not intended to limit or otherwise restrict the terms and conditions set forth herein.

2. **GOVERNING LAW** This procurement, the resulting contract and any purchase orders issued hereunder shall be governed by the laws of the State of New York except where the Federal supremacy clause requires otherwise, and actions or proceedings arising from the contract shall be heard in a court of competent jurisdiction in the State of New York.

3. **ETHICS COMPLIANCE** All Bidders/Contractors and their employees must comply with the requirements of Sections 73 and 74 of the Public Officers Law, other State codes, rules, regulations and executive orders establishing ethical standards for the conduct of business with New York State. In signing the Bid, Bidder certifies full compliance with those provisions for any present or future dealings, transactions, sales, contracts, services, offers, relationships, etc., involving New York State and/or its employees. Failure to comply with those provisions may result in disqualification from the Bidding process, termination of contract, and/or other civil or criminal proceedings as required by law.

4. **CONFLICT OF TERMS** Unless otherwise set forth in the procurement or contract documents, conflicts among documents shall be resolved in the following order of precedence:

a. **Appendix A** (Standard Clauses for NYS Contracts)

b. **Mini-Bid Project Definition** if applicable and in accordance with the terms and conditions of the Back-Drop Contract.

c. **Contract and other writing(s)** setting forth the final agreements, clarifications and terms between the Bid Documents and Contractor's Bid. In the latter circumstance, clarifications must specifically note in writing what was offered by the Contractor and what was accepted by the State. If not, such clarifications shall be considered last in the order of precedence under this paragraph.

d. **Bid Documents** (Other than Appendix A).

i. Bid Specifications prepared by the Authorized User.

ii. Appendix B (General Specifications).

iii. Incorporated Contract Appendices, if any, following the order of precedence as stated for Contract above.

e. **Contractor's Bid or Mini-Bid Proposal**.

f. **Unincorporated Appendices** (if any).

5. DEFINITIONS Terms used in this Appendix B shall have the following meanings:

AFFILIATE Any individual or other legal entity, (including but not limited to sole proprietor, partnership, limited liability company, firm or corporation) that effectively controls another company in which (a) the Bidder owns more than 50% of the ownership; or (b) any individual or other legal entity which owns more than 50% of the ownership of the Bidder. In addition, if a Bidder owns less than 50% of the ownership of another legal entity, but directs or has the right to direct such entity's daily operations, that entity will be an Affiliate.

AGENCY OR AGENCIES The State of New York, acting by or through one or more departments, boards, commissions, offices or institutions of the State of New York.

ATTORNEY GENERAL Attorney General of the State of New York.

AUTHORIZED USER(S) Agencies, or any other entity authorized by the laws of the State of New York to participate in NYS centralized contracts (including but not limited to political subdivisions, public authorities, public benefit corporations and certain other entities set forth in law), or the State of New York acting on behalf of one or more such Agencies or other entities, provided that each such Agency or other entity shall be held solely responsible for liabilities or payments due as a result of its participation.

BID OR BID PROPOSAL An offer or proposal submitted by a Bidder to furnish a described product or a solution, perform services or means of achieving a practical end, at a stated price for the stated Contract term. As required by the Bid Documents, the Bid or proposal may be subject to modification through the solicitation by the Agency of best and final offers during the evaluation process prior to recommendation for award of the Contract.

BIDDER/OFFERER Any individual or other legal entity (including but not limited to sole proprietor, partnership, limited liability company, firm or corporation) which submits a Bid in response to a Bid Solicitation. The term Bidder shall also include the term "offeror." In the case of negotiated Contracts, "Bidder" shall refer to the "Contractor."

BID DOCUMENTS Writings by the State setting forth the scope, terms, conditions and technical specifications for a procurement of Product. Such writings typically include, but are not limited to: Invitation for Bids (IFB), Request for Quotation (RFQ), Request for Proposals (RFP), addenda or amendments thereto, and terms and conditions which are incorporated by reference, including but not limited to, Appendix A (Standard Clauses for NYS Contracts), Appendix B, (General Specifications). Where these General Specifications are incorporated in negotiated Contracts that have not been competitively Bid, the term "Bid Documents" shall be deemed to refer to the terms and conditions set forth in the negotiated Contract and associated documentation.

BID SPECIFICATION A written description drafted by the Authorized User setting forth the specific terms of the intended procurement, which may include: physical or functional characteristics, the nature of a commodity or construction item, any description of the work to be performed, Products to be provided, the necessary qualifications of the Bidder, the capacity and capability of the Bidder to successfully carry out the proposed Contract, or the process for achieving specific results and/or anticipated outcomes or any other requirement necessary to perform work. Where these General Specifications are incorporated in negotiated Contracts that have not been competitively Bid, the term "Bid Specifications" shall be deemed to refer to the terms and conditions set forth in the negotiated Contract and associated documentation.

COMMISSIONER Commissioner of OGS, or in the case of Bid Specifications issued by an Authorized User, the head of such Authorized User or their authorized representative.

COMPTROLLER Comptroller of the State of New York.

CONTRACT The writing(s) which contain the agreement of the Commissioner and the Bidder/Contractor setting forth the total legal obligation between the parties as determined by applicable rules of law, and which most typically include the following classifications of public procurements:

a. Agency Specific Contracts Contracts where the specifications for a Product or a particular scope of work are described and defined to meet the needs of one or more Authorized User(s).

b. Centralized Contracts Single or multiple award Contracts where the specifications for a Product or general scope of work are described and defined by the Office of General Services to meet the needs of Authorized Users. Centralized Contracts may be awarded through multiple awards or through adoption of another jurisdiction's contract or on a sole source, single source, emergency or competitive basis. Once established, procurements may be made from the selected Contractor(s) without further competition or Mini-Bid unless otherwise required by the Bid Specifications or Contract Award Notification.

c. Back-Drop Contracts Multiple award Centralized Contracts where the Office of General Services defines the specifications for a Product or general scope of work to meet the needs of Authorized Users. Bids may be submitted either at a date and time certain or may be accepted on a continuous or periodic recruitment basis, as set forth in the Bid Specifications. Selection of a Contractor(s) from among Back-Drop contract holders for an actual Product, project or particular scope of work may subsequently be made on a single or sole source basis, or on the basis of a Mini-Bid among qualified Back-Drop contract holders, or such other method as set forth in the Bid Document.

d. Piggyback Contract A Contract let by any department, agency or instrumentality of the United States government, or any department, agency, office, political subdivision or instrumentality of any state or state(s) which is adopted and extended for use by the OGS Commissioner in accordance with the requirements of the State Finance Law.

e. Contract Letter A letter to the successful Bidder(s) indicating acceptance of its Bid in response to a solicitation. Unless otherwise specified, the issuance of a Letter of Acceptance forms a Contract but is not an order for Product, and Contractor should not take any action with respect to actual Contract deliveries except on the basis of Purchase Orders sent from Authorized User(s).

CONTRACT AWARD NOTIFICATION An announcement to Authorized Users that a Contract has been established.

CONTRACTOR Any successful Bidder(s) to whom a Contract has been awarded by the Commissioner.

DOCUMENTATION The complete set of manuals (e.g., user, installation, instruction or diagnostic manuals) in either hard or electronic copy, which are necessary to enable an Authorized User to properly test, install, operate and enjoy full use of the Product.

EMERGENCY An urgent and unexpected requirement where health and public safety or the conservation of public resources is at risk.

ENTERPRISE The total business operations in the United States of Authorized User (s) without regard to geographic location where such operations are performed or the entity actually performing such operations on behalf of Authorized User.

ENTERPRISE LICENSE A license grant of unlimited rights to deploy, access, use and execute Product anywhere within the Enterprise up to the maximum capacity stated on the Purchase Order or in the Contract.

ERROR CORRECTIONS Machine executable software code furnished by Contractor which corrects the Product so as to conform to the applicable warranties, performance standards and/or obligations of the Contractor.

GROUP A classification of Product, services or technology which is designated by OGS.

INVITATION FOR BIDS (**IFB**) A type of Bid Document which is most typically used where requirements can be stated and award will be made based on lowest price to the responsive and responsible Bidder(s).

LICENSED SOFTWARE Software transferred upon the terms and conditions set forth in the Contract. "Licensed Software" includes error corrections, upgrades, enhancements or new releases, and any deliverables due under a maintenance or service contract (e.g., patches, fixes, PTFs, programs, code or data conversion, or custom programming).

LICENSEE One or more Authorized Users who acquire Product from Contractor by issuing a Purchase Order in accordance with the terms and conditions of the Contract; provided that, for purposes of compliance with an individual license, the term "Licensee" shall be deemed to refer separately to the individual Authorized User(s) who took receipt of and who is executing the Product, and who shall be solely responsible for performance and liabilities incurred. In the case of acquisitions by State Agencies, the Licensee shall be the State of New York.

LICENSE EFFECTIVE DATE The date Product is delivered to an Authorized User. Where a License involves Licensee's right to copy a previously licensed and delivered Master Copy of a Program, the license effective date for additional copies shall be deemed to be the date on which the Purchase Order is executed.

LICENSOR A Contractor who transfers rights in proprietary Product to Authorized Users in accordance with the rights and obligations specified in the Contract.

MINI-BID PROJECT DEFINITION A Bid Document containing project specific Bid Specifications developed by or for an Authorized User which solicits Bids from Contractors previously qualified under a Back-Drop Contract.

MULTIPLE AWARD A determination and award of a Contract in the discretion of the Commissioner to more than one responsive and responsible Bidder who meets the requirements of a specification, where the multiple award is made on the grounds set forth in the Bid Document in order to satisfy multiple factors and needs of Authorized Users (e.g., complexity of items, various manufacturers, differences in performance required to accomplish or produce required end results, production and distribution facilities, price, compliance with delivery requirements, geographic location or other pertinent factors).

NEW PRODUCT RELEASES (Product Revisions) Any commercially released revisions to the licensed version of a Product as may be generally offered and available to Authorized Users. New releases involve a substantial revision of functionality from a previously released version of the Product.

OGS The New York State Office of General Services.

PROCUREMENT RECORD Documentation by the Authorized User of the decisions made and approach taken during the procurement process and during the contract term.

PRODUCT A deliverable under any Bid or Contract which may include commodities, services and/or technology. The term "Product" includes Licensed Software.

PROPRIETARY Protected by secrecy, patent, copyright or trademark against commercial competition.

PURCHASE ORDER The Authorized User's fiscal form or format that is used when making a purchase (e.g., formal written Purchase Order, Procurement Card, electronic Purchase Order, or other authorized instrument).

REQUEST FOR PROPOSALS (RFP) A type of Bid Document that is used for procurements where factors in addition to cost are considered and weighted in awarding the contract and where the method of award is "best value," as defined by the State Finance Law.

REQUEST FOR QUOTATION (RFQ) A type of Bid Document that can be used when a formal Bid opening is not required (e.g., discretionary, sole source, single source or emergency purchases).

RESPONSIBLE BIDDER A Bidder that is determined to have financial and organizational capacity, legal authority, satisfactory previous performance, skill, judgment and integrity, and that is found to be competent, reliable and experienced, as determined by the Commissioner. For purposes of being deemed responsible, a Bidder must also be determined to be in compliance with Sections 139-j and 139-k of the State Finance Law relative to restrictions on contacts during the procurement process and disclosure of contacts and prior findings of non-responsibility under these statutes.

RESPONSIVE BIDDER A Bidder meeting the specifications or requirements prescribed in the Bid Document or solicitation, as determined by the OGS Commissioner.

SINGLE SOURCE A procurement where two or more Bidders can supply the required Product, and the Commissioner may award the contract to one Bidder over the other.

SITE The location (street address) where Product will be executed or services delivered.

SOLE SOURCE A procurement where only one Bidder is capable of supplying the required Product.

SOURCE CODE The programming statements or instructions written and expressed in any language understandable by a human being skilled in the art which are translated by a language compiler to produce executable machine Object Code.

STATE State of New York.

SUBCONTRACTOR Any individual or other legal entity, (including but not limited to sole proprietor, partnership, limited liability company, firm or corporation) who has entered into a contract, express or implied, for the performance of a portion of a Contract with a Contractor.

TERMS OF LICENSE The terms and conditions set forth in the Contract that are in effect and applicable to a Purchase Order at the time of order placement.

VIRUS Any computer code, whether or not written or conceived by Contractor, that disrupts, disables, harms, or otherwise impedes in any manner the operation of the Product, or any other associated software, firmware, hardware, or computer system (such as local area or wide-area networks), including aesthetic disruptions or distortions, but does not include security keys or other such devices installed by Product manufacturer.

BID SUBMISSION

6. INTERNATIONAL BIDDING All offers (tenders), and all information and Product required by the solicitation or provided as explanation thereof, shall be submitted in English. All prices shall be expressed, and all payments shall be made, in United States Dollars ($US). Any offers (tenders) submitted which do not meet the above criteria will be rejected.

7. BID OPENING Bids may, as applicable, be opened publicly. The Commissioner reserves the right at any time to postpone or cancel a scheduled Bid opening.

8. BID SUBMISSION All Bids are to be packaged, sealed and submitted to the location stated in the Bid Specifications. Bidders are solely responsible for timely delivery of their Bids to the location set forth in the Bid Specifications prior to the stated Bid opening date/time.

A Bid return envelope, if provided with the Bid Specifications, should be used with the Bid sealed inside. If the Bid response does not fit into the envelope, the Bid envelope should be attached to the outside of the sealed box or package with the Bid inside. If using a commercial delivery company that requires use of their shipping package or envelope, Bidder's sealed Bid, labeled as detailed below, should be placed within the shipper's sealed envelope to ensure that the Bid is not prematurely opened.

All Bids must have a label on the outside of the package or shipping container outlining the following information:

"**BID ENCLOSED** (bold print, all capitals)

- Group Number
- IFB or RFP Number
- Bid Submission date and time"

In the event that a Bidder fails to provide such information on the return Bid envelope or shipping material, the receiving entity reserves the right to open the shipping package or envelope to determine the proper Bid number or Product group, and the date and time of Bid opening. Bidder shall have no claim against the receiving entity arising from such opening and such opening shall not affect the validity of the Bid or the procurement.

Notwithstanding the receiving agency's right to open a Bid to ascertain the foregoing information, Bidder assumes all risk of late delivery associated with the Bid not being identified, packaged or labeled in accordance with the foregoing requirements.

All Bids must be signed by a person authorized to commit the Bidder to the terms of the Bid Documents and the content of the Bid (offer).

9. FACSIMILE SUBMISSIONS Unless specifically prohibited by the terms of the Bid Specifications, facsimile Bids may be SUBMITTED AT THE SOLE OPTION AND RISK OF THE BIDDER. Only the FAX number(s) indicated in the Bid Specifications may be used. Access to the facsimile machine(s) is on a "first come, first serve" basis, and the Commissioner bears no liability or responsibility and makes no guarantee whatsoever with respect to

the Bidder's access to such equipment at any specific time. Bidders are solely responsible for submission and receipt of the entire facsimile Bid by the Authorized User prior to Bid opening and must include on the first page of the transmission the total number of pages transmitted in the facsimile, including the cover page. Incomplete, ambiguous or unreadable transmissions in whole or in part may be rejected at the sole discretion of the Commissioner. Facsimile Bids are fully governed by all conditions outlined in the Bid Documents and must be submitted on forms or in the format required in the Bid Specifications, including the executed signature page and acknowledgment.

10. AUTHENTICATION OF FACSIMILE BIDS The act of submitting a Bid by facsimile transmission, including an executed signature page or as otherwise specified in the Bid Documents, shall be deemed a confirming act by Bidder which authenticates the signing of the Bid.

11. LATE BIDS For purposes of Bid openings held and conducted by OGS, a Bid must be received in such place as may be designated in the Bid Documents or if no place is specified in the OGS Mailroom located in the Empire State Plaza, Albany, New York 12242, at or before the date and time established in the Bid Specifications for the Bid opening. For purposes of Bid openings held and conducted by Authorized Users other than OGS, the term late Bid is defined as a Bid not received in the location established in the Bid Specifications at or before the date and time specified for the Bid opening.

Any Bid received at the specified location after the time specified will be considered a late Bid. A late Bid shall not be considered for award unless: (i) no timely Bids meeting the requirements of the Bid Documents are received or, (ii) in the case of a multiple award, an insufficient number of timely Bids were received to satisfy the multiple award; and acceptance of the late Bid is in the best interests of the Authorized Users. Bids submitted for continuous or periodic recruitment contract awards must meet the submission requirements associated with their specifications. Delays in United States mail deliveries or any other means of transmittal, including couriers or agents of the Authorized User shall not excuse late Bid submissions. Similar types of delays, including but not limited to, bad weather, or security procedures for parking and building admittance shall not excuse late Bid submissions. Determinations relative to Bid timeliness shall be at the sole discretion of the Commissioner.

12. BID CONTENTS Bids must be complete and legible. All Bids must be signed. All information required by the Bid Specifications must be supplied by the Bidder on the forms or in the format specified. No alteration, erasure or addition is to be made to the Bid Documents. Changes may be ignored by the Commissioner or may be grounds for rejection of the Bid. Changes, corrections and/or use of white-out in the Bid or Bidder's response portion of the Bid Document must be initialed by an authorized representative of the Bidder. Bidders are cautioned to verify their Bids before submission, as amendments to Bids or requests for withdrawal of Bids received by the Commissioner after the time specified for the Bid opening, may not be considered.

13. EXTRANEOUS TERMS Bids must conform to the terms set forth in the Bid Documents, as extraneous terms or material deviations (including additional, inconsistent, conflicting or alternative terms) may render the Bid non-responsive and may result in rejection of the Bid.

Extraneous term(s) submitted on standard, pre-printed forms (including but not limited to: product literature, order forms, license agreements, contracts or other documents) that are attached or referenced with submissions shall not be considered part of the Bid or resulting Contract, but shall be deemed included for informational or promotional purposes only.

Only those extraneous terms that meet all the following requirements may be considered as having been submitted as part of the Bid:

a. Each proposed extraneous term (addition, deletion, counter-offer, deviation, or modification) must be specifically enumerated in a writing which is not part of a pre-printed form; and

b. The writing must identify the particular specification requirement (if any) that Bidder rejects or proposes to modify by inclusion of the extraneous term; and

c. The Bidder shall enumerate the proposed addition, counter offer, modification or deviation from the Bid Document, and the reasons therefore.

No extraneous term(s), whether or not deemed "material," shall be incorporated into a Contract or Purchase Order unless submitted in accordance with the above and the Commissioner or Authorized User expressly accepts each such term(s) in writing. Acceptance and/or processing of the Bid shall not constitute such written acceptance of Extraneous Term(s).

14. CONFIDENTIAL/TRADE SECRET MATERIALS

a. Contractor Confidential, trade secret or proprietary materials as defined by the laws of the State of New York must be clearly marked and identified as such upon submission by the Bidder. Marking the Bid as "confidential" or "proprietary" on its face or in the document header or footer shall not be considered by the Commissioner or Authorized User to be sufficient without specific justification as to why disclosure of particular information in the Bid would cause substantial injury to the competitive position of the Bidder. Bidders/Contractors intending to seek an exemption from disclosure of these materials under the Freedom of Information Law must request the exemption in writing, setting forth the reasons for the claimed exemption. Acceptance of the claimed materials does not constitute a determination on the exemption request, which determination will be made in accordance with statutory procedures. Properly identified information that has been designated confidential, trade secret, or proprietary by the Bidder will not be disclosed except as may be required by the Freedom of Information Law or other applicable State and federal laws.

b. Commissioner or Authorized User Contractor further warrants, covenants and represents that any confidential information obtained by Contractor, its agents, Subcontractors, officers, distributors, resellers or employees in the course of performing its obligations, including without limitation, security procedures, business operations information, or commercial proprietary information in the possession of the State or any Authorized User hereunder or received from another third party, will not be divulged to any third parties. Contractor shall not be required to keep confidential any such material that is publicly available through no fault of Contractor, independently developed by Contractor without reliance on confidential information of the Authorized User, or otherwise obtained under the Freedom of Information Act or other applicable New York State laws and regulations. This warranty shall survive termination of this Contract. Contractor further agrees to take appropriate steps as to its agents, Subcontractors, officers, distributors, resellers or employees regarding the obligations arising under this clause to insure such confidentiality.

15. RELEASE OF BID EVALUATION MATERIALS Requests concerning the evaluation of Bids may be submitted under the Freedom of Information Law. Information, other than statistical or

factual tabulations or data such as the Bid Tabulation, shall only be released as required by law after Contract award. Bid Tabulations are not maintained for all procurements. Names of Bidders may be disclosed after Bid opening upon request. Written requests should be directed to the Commissioner.

16. FREEDOM OF INFORMATION LAW During the evaluation process, the content of each Bid will be held in confidence and details of any Bid will not be revealed (except as may be required under the Freedom of Information Law or other State law). The Freedom of Information Law provides for an exemption from disclosure for trade secrets or information the disclosure of which would cause injury to the competitive position of commercial enterprises. This exception would be effective both during and after the evaluation process. If the Bid contains any such trade secret or other confidential or proprietary information, it must be accompanied in the Bid with a written request to the Commissioner to not disclose such information. Such request must state with particularity the reasons why the information should not be available for disclosure and must be provided at the time of submission of the Bid. Notations in the header, footer or watermark of the Bid Document will not be considered sufficient to constitute a request for non-disclosure of trade secret or other confidential or proprietary information. Where a Freedom of Information request is made for trademark or other confidential or proprietary information, the Commissioner reserves the right to determine upon written notice to the Bidder whether such information qualifies for the exemption for disclosure under the law. Notwithstanding the above, where a Bid tabulation is prepared and Bids publicly opened, such Bid tabulation shall be available upon request.

17. PREVAILING WAGE RATES - PUBLIC WORKS AND BUILDING SERVICES CONTRACTS If any portion of work being Bid is subject to the prevailing wage rate provisions of the Labor Law, the following shall apply:

a. "Public Works" and "Building Services" - Definitions

i. Public Works Labor Law Article 8 applies to contracts for public improvement in which laborers, workers or mechanics are employed on a "public works" project (distinguished from public "procurement" or "service" contracts). The State, a public benefit corporation, a municipal corporation (including a school district), or a commission appointed by law must be a party to the Contract. The wage and hours provision applies to any work performed by Contractor or Subcontractors.

ii. Building Services Labor Law Article 9 applies to Contracts for building service work over $1,500 with a public agency, that: (i) involve the care or maintenance of an existing building, or (ii) involve the transportation of office furniture or equipment to or from such building, or (iii) involve the transportation and delivery of fossil fuel to such building, and (iv) the principal purpose of which is to furnish services through use of building service employees.

b. Prevailing Wage Rate Applicable to Bid Submissions A copy of the applicable prevailing wage rates to be paid or provided are annexed to the Bid Documents. Bidders must submit Bids which are based upon the prevailing hourly wages, and supplements in cash or equivalent benefits (i.e., fringe benefits and any cash or non-cash compensation which are not wages, as defined by law) that equal or exceed the applicable prevailing wage rate(s) for the location where the work is to be performed. Bidders may not submit Bids based upon hourly wage rates and supplements below the applicable prevailing wage rates as established by the New York State Department of Labor. Bids that fail to comply with this requirement will be disqualified.

c. Wage Rate Payments / Changes During Contract Term The wages to be paid under any resulting Contract shall not be less than the prevailing rate of wages and supplements as set forth by law. It is required that the Contractor keep informed of all changes in the Prevailing Wage Rates during the Contract term that apply to the classes of individuals supplied by the Contractor on any projects resulting from this Contract, subject to the provisions of the Labor Law. Contractor is solely liable for and must pay such required prevailing wage adjustments during the Contract term as required by law.

d. Public Posting & Certified Payroll Records In compliance with Article 8, Section 220 of the New York State Labor Law:

i. Posting The Contractor must publicly post on the work site, in a prominent and accessible place, a legible schedule of the prevailing wage rates and supplements.

ii. Payroll Records Contractors and Subcontractors must keep original payrolls or transcripts subscribed and affirmed as true under the penalties of perjury as required by law. For public works contracts over $25,000 where the Contractor maintains no regular place of business in New York State, such records must be kept at the work site. For building services contracts, such records must be kept at the work site while work is being performed.

iii. Submission of Certified Payroll Transcripts for Public Works Contracts Only Contractors and Subcontractors on public works projects must submit monthly payroll transcripts to the Authorized User that has prepared or directs the preparation of the plans and specifications for a public works project, as set forth in the Bid Specifications. For Mini-Bid solicitations, the payroll records must be submitted to the entity preparing the agency Mini-Bid project specification. For "agency specific" Bids, the payroll records should be submitted to the entity issuing the purchase order. For all other OGS Centralized Contracts, such records should be submitted to the individual agency issuing the purchase order(s) for the work. Upon mutual agreement of the Contractor and the Authorized User, the form of submission may be submitted in a specified disk format acceptable to the Department of Labor provided: 1) the Contractor/Subcontractor retains the original records; and, (2) an original signed letter by a duly authorized individual of the Contractor or Subcontractor attesting to the truth and accuracy of the records accompanies the disk. This provision does not apply to Article 9 of the Labor Law building services contracts.

iv. Records Retention Contractors and Subcontractors must preserve such certified transcripts for a period of three years from the date of completion of work on the awarded contract.

Day's Labor Eight hours shall constitute a legal day's work for all classes of employees in this state except those engaged in farm and domestic service unless otherwise provided by law.

No laborers, workmen or mechanics in the employ of the Contractor, Subcontractor or other person doing or contracting to do all or part of the work contemplated by the Contract shall be permitted or required to work more than eight hours in any one calendar day or more than five calendar days in any one week except in cases of extraordinary emergency including fire, flood or danger to life or property. "Extraordinary emergency" shall be deemed to include situations in which sufficient laborers, workers and mechanics cannot be employed to carry on public work expeditiously as a result of such restrictions upon the number of hours and days of labor and the immediate commencement or prosecution or completion without undue delay of the public work is necessary in the judgment of the NYS

Commissioner of Labor for the preservation of the Contract site or for the protection of the life and limb of the persons using the Contract site.

18. TAXES

a. Unless otherwise specified in the Bid Specifications or Contract, the quoted Bid price includes all taxes applicable to the transaction.

b. Purchases made by the State of New York and certain non-State Authorized Users are exempt from New York State and local sales taxes and, with certain exceptions, federal excise taxes. To satisfy the requirements of the New York State Sales tax exemption, either the Purchase Order issued by a State Agency or the invoice forwarded to authorize payment for such purchases will be sufficient evidence that the sale by the Contractor was made to the State, an exempt organization under Section 1116 (a) (1) of the Tax Law. Non-State Authorized Users must offer their own proof of exemption upon request. No person, firm or corporation is, however, exempt from paying the State Truck Mileage and Unemployment Insurance or Federal Social Security taxes, which remain the sole responsibility of the Bidder/Contractor.

c. Pursuant to Revised Tax Law 5-a, Contractor will be required to furnish sales tax certification on its behalf and for its affiliates, and subcontractors for Contracts with a value greater than $100,000 in accordance with provisions of the law.

d. Purchases by Authorized Users other than the State of New York may be subject to certain taxes which were not included in the Bid price, and in those instances the tax should be computed based on the Contract price and added to the invoice submitted to such entity for payment.

19. EXPENSES PRIOR TO CONTRACT EXECUTION The Commissioner and any Authorized User(s) are not liable for any costs incurred by a Vendor, Bidder or Contractor in the preparation and production of a Bid, Mini-Bid or best and final offers or for any work performed prior to Contract execution.

20. ADVERTISING RESULTS The prior written approval of the Commissioner is required in order for results of the Bid to be used by the Contractor as part of any commercial advertising. The Contractor shall also obtain the prior written approval of the Commissioner relative to the Bid or Contract for press or other media releases.

21. PRODUCT REFERENCES

a. "**Or Equal**" In all Bid Specifications the words "or equal" are understood to apply where a copyrighted, brand name, trade name, catalog reference, or patented Product is referenced. References to such specific Product are intended as descriptive, not restrictive, unless otherwise stated. Comparable Product will be considered if proof of compatibility is provided, including appropriate catalog excerpts, descriptive literature, specifications and test data, etc. The Commissioner's decision as to acceptance of the Product as equal shall be final.

b. Discrepancies in References In the event of a discrepancy between the model number referenced in the Bid Specifications and the written description of the Products which cannot be reconciled, with respect to such discrepancy, then the written description shall prevail.

22. REMANUFACTURED, RECYCLED, RECYCLABLE OR RECOVERED MATERIALS Upon the conditions specified in the Bid Specifications and in accordance with the laws of the State of New York, Contractors are encouraged to use recycled, recyclable or recovered materials in the manufacture of Products and packaging to the maximum extent practicable without jeopardizing the performance or intended end use of the Product or packaging unless such use is precluded due to health, welfare, safety requirements or in the Bid Specifications. Contractors are further encouraged to offer remanufactured Products to the maximum extent practicable without jeopardizing the performance or intended end use of the Product and unless such use is precluded due to health, welfare, safety requirements or by the Bid Specifications. Where such use is not practical, suitable, or permitted by the Bid Specifications, Contractor shall deliver new materials in accordance with the "Warranties" set forth below.

Items with recycled, recyclable, recovered, refurbished or remanufactured content must be identified in the Bid or Bidder will be deemed to be offering new Product.

23. PRODUCTS MANUFACTURED IN PUBLIC INSTITUTIONS Bids offering Products that are manufactured or produced in public institutions will be rejected.

24. PRICING

a. Unit Pricing If required by the Bid Specifications, the Bidder should insert the price per unit specified and the price extensions in decimals, not to exceed four places for each item unless otherwise specified, in the Bid. In the event of a discrepancy between the unit price and the extension, the unit price shall govern unless, in the sole judgment of the Commissioner, such unit pricing is obviously erroneous.

b. Net Pricing Unless otherwise required by the Bid Specifications, prices shall be net, including transportation, customs, tariff, delivery and other charges fully prepaid by the Contractor to the destination(s) indicated in the Bid Specifications, subject to the cash discount.

c. "No Charge" Bid When Bids are requested on a number of Products as a Group or Lot, a Bidder desiring to Bid "no charge" on a Product in the Group or Lot must clearly indicate such. Otherwise, such Bid may be considered incomplete and be rejected, in whole or in part, at the discretion of the Commissioner.

d. Educational Pricing All Products to be supplied for educational purposes that are subject to educational discounts shall be identified in the Bid and such discounts shall be made available to qualifying institutions.

e. Third Party Financing If Product acquisitions are financed through any third party financing, Contractor may be required as a condition of Contract Award to agree to the terms and conditions of a "Consent & Acknowledgment Agreement" in a form acceptable to the Commissioner.

f. Best Pricing Offer During the Contract term, if substantially the same or a smaller quantity of a Product is sold by the Contractor outside of this Contract upon the same or similar terms and conditions as that of this Contract at a lower price to a federal, state or local governmental entity, the price under this Contract, at the discretion of the Commissioner, shall be immediately reduced to the lower price.

Price decreases shall take effect automatically during the Contract term and apply to Purchase Orders submitted on or after:

(i) GSA Changes: Where NYS Net Prices are based on an approved GSA Schedule, the date the approved GSA Schedule pricing decreases during the Contract term; or

(ii) Commercial Price List Reductions: Where NYS Net Prices are based on a discount from Contractor's list prices, the date Contractor

lowers its pricing to its customers generally or to similarly situated government customers during the Contract term; or

(iii) Special Offers/Promotions Generally: Where Contractor generally offers more advantageous special price promotions or special discount pricing to other customers during the Contract term for a similar quantity, and the maximum price or discount associated with such offer or promotion is better than the discount or Net Price otherwise available under this Contract, such better price or discount shall apply for similar quantity transactions under this Contract for the life of such general offer or promotion; and

(iv) Special Offers/Promotions to Authorized Users: Contractor may offer Authorized Users, under either this Contract or any other Contracting vehicle, competitive pricing which is lower than the NYS Net Price set forth herein at any time during the Contract term and such lower pricing shall not be applied as a global price reduction under the Contract pursuant to the foregoing paragraph (iii).

Unless otherwise specified in the Bid Specifications, Contractor may offer lower prices or better terms (see Modification of Contract Terms) on any specific Purchase Order(s) from any Authorized User without being in conflict with, or obligation to comply on a global basis, with the terms of this clause.

g. Best and Final Prices As specified in the Bid Documents and Contract, a Contractor may be solicited at the time of issuance of a Purchase Order or Mini-Bid award for best and final pricing for the Product or service to be delivered to the Authorized User. Contractors are encouraged to reduce their pricing upon receipt of such request.

25. DRAWINGS

a. Drawings Submitted With Bid When the Bid Specifications require the Bidder to furnish drawings and/or plans, such drawings and/or plans shall conform to the mandates of the Bid Documents and shall, when approved by the Commissioner, be considered a part of the Bid and of any resulting Contract. All symbols and other representations appearing on the drawings shall be considered a part of the drawing.

b. Drawings Submitted During the Contract Term Where required to develop, maintain and deliver diagrams or other technical schematics regarding the scope of work, Contractor shall do so on an ongoing basis at no additional charge, and must, as a condition of payment, update drawings and plans during the Contract term to reflect additions, alterations, and deletions. Such drawings and diagrams shall be delivered to the Authorized User's representative.

c. Accuracy of Drawings Submitted All drawings shall be neat and professional in manner and shall be clearly labeled as to locations and type of product, connections and components. Drawings and diagrams are to be in compliance with accepted drafting standards. Acceptance or approval of such plans shall not relieve the Contractor from responsibility for design or other errors of any sort in the drawings or plans, or from its responsibility for performing as required, furnishing product, services or installation, or carrying out any other requirements of the intended scope of work.

26. SITE INSPECTION Where a site inspection is required by the Bid Specifications or Project Definition, Bidder shall be required to inspect the site, including environmental or other conditions for pre-existing deficiencies that may affect the installed Product, equipment, or environment or services to be provided and, which may affect Bidder's ability to properly deliver, install or otherwise provide the required Product. All inquiries regarding such conditions shall be made in writing. Bidder shall be deemed to have knowledge of any deficiencies or conditions which such inspection or inquiry might have disclosed. Bidder must provide a detailed explanation with its Bid if additional work is required under this clause in order to properly complete the delivery and installation of the required Product or provide the requested service.

27. PROCUREMENT CARD The State has entered into an agreement for purchasing card services. The Purchasing Card enables Authorized Users to make authorized purchases directly from a Contractor without processing a Purchase Orders or Purchase Authorizations. Purchasing Cards are issued to selected employees authorized to purchase for the Authorized User and having direct contact with Contractors. Cardholders can make purchases directly from any Contractor that accepts the Purchasing Card.

The Contractor shall not process a transaction for payment through the credit card clearinghouse until the purchased products have been shipped or services performed. Unless the cardholder requests correction or replacement of a defective or faulty Product in accordance with other Contract requirements, the Contractor shall immediately credit a cardholder's account for products returned as defective or faulty.

28. SAMPLES

a. Standard Samples Bid Specifications may indicate that the Product to be purchased must be equal to a standard sample on display in a place designated by the Commissioner and such sample will be made available to the Bidder for examination prior to the opening date. Failure by the Bidder to examine such sample shall not entitle the Bidder to any relief from the conditions imposed by the Bid Specifications.

b. Bidder Supplied Samples The Commissioner reserves the right to request from the Bidder/Contractor a representative sample(s) of the Product offered at any time prior to or after award of a contract. Unless otherwise instructed, samples shall be furnished within the time specified in the request. Untimely submission of a sample may constitute grounds for rejection of Bid or cancellation of the Contract. Samples must be submitted free of charge and be accompanied by the Bidder's name and address, any descriptive literature relating to the Product and a statement indicating how and where the sample is to be returned. Where applicable, samples must be properly labeled with the appropriate Bid or Contract reference.

A sample may be held by the Commissioner during the entire term of the Contract and for a reasonable period thereafter for comparison with deliveries. At the conclusion of the holding period the sample, where feasible, will be returned as instructed by the Bidder, at the Bidder's expense and risk. Where the Bidder has failed to fully instruct the Commissioner as to the return of the sample (i.e., mode and place of return, etc.) or refuses to bear the cost of its return, the sample shall become the sole property of the receiving entity at the conclusion of the holding period.

c. Enhanced Samples When an approved sample exceeds the minimum specifications, all Product delivered must be of the same enhanced quality and identity as the sample. Thereafter, in the event of a Contractor's default, the Commissioner may procure a Product substantially equal to the enhanced sample from other sources, charging the Contractor for any additional costs incurred.

d. Conformance with Sample(s) Submission of a sample (whether or not such sample is tested by, or for, the Commissioner) and approval thereof shall not relieve the Contractor from full compliance with all terms and conditions, performance related and otherwise, specified in the Bid Specifications. If in the judgment of the Commissioner the sample or product submitted is not in accordance with the specifications or testing requirements prescribed in the Bid

Specifications, the Commissioner may reject the Bid. If an award has been made, the Commissioner may cancel the Contract at the expense of the Contractor.

e. Testing All samples are subject to tests in the manner and place designated by the Commissioner, either prior to or after Contract award. Unless otherwise stated in the Bid Specifications, Bidder samples consumed or rendered useless by testing will not be returned to the Bidder. Testing costs for samples that fails to meet Contract requirements may be at the expense of the Contractor.

f. Requests For Samples By Authorized Users Requests for samples by Authorized Users require the consent of the Contractor. Where Contractor refuses to furnish a sample, Authorized User may, in its sole discretion, make a determination on the performance capability of the Product or on the issue in question.

BID EVALUATION

29. BID EVALUATION The Commissioner reserves the right to accept or reject any and all Bids, or separable portions of offers, and waive technicalities, irregularities, and omissions if the Commissioner determines the best interests of the State will be served. The Commissioner, in his/her sole discretion, may accept or reject illegible, incomplete or vague Bids and his/her decision shall be final. A conditional or revocable Bid which clearly communicates the terms or limitations of acceptance may be considered, and Contract award may be made in compliance with the Bidder's conditional or revocable terms in the offer.

30. CONDITIONAL BID Unless the Bid Specifications provides otherwise, a Bid is not rendered non-responsive if the Bidder specifies that the award will be accepted only on all or a specified group of items or Product included in the specification. It is understood that nothing herein shall be deemed to change or alter the method of award contained in the Bid Documents.

31. CLARIFICATIONS / REVISIONS Prior to award, the Commissioner reserves the right to seek clarifications, request Bid revisions, or to request any information deemed necessary for proper evaluation of Bids from all Bidders deemed to be eligible for Contract award. Failure to provide requested information may result in rejection of the Bid.

32. PROMPT PAYMENT DISCOUNTS While prompt payment discounts will not be considered in determining the low Bid, the Commissioner may consider any prompt payment discount in resolving Bids which are otherwise tied. However, any notation indicating that the price is net, (e.g., net 30 days), shall be understood to mean only that no prompt payment discount is offered by the Bidder. The imposition of service, interest, or other charges, except pursuant to the provisions of Article 11-A of the State Finance Law, which are applicable in any case, may render the Bid non-responsive and may be cause for its rejection.

33. EQUIVALENT OR IDENTICAL BIDS In the event two offers are found to be substantially equivalent, price shall be the basis for determining the award recipient. If two or more Bidders submit substantially equivalent Bids as to pricing or other factors, the decision of the Commissioner to award a Contract to one or more of such Bidders shall be final.

34. PERFORMANCE AND RESPONSIBILITY QUALIFICATIONS The Commissioner reserves the right to investigate or inspect at any time whether or not the Product, services, qualifications or facilities offered by the Bidder/Contractor meet the requirements set forth in the Bid Specifications/Contract or as set forth during Contract negotiations. Contractor shall at all times during the Contract term remain responsible and responsive. A Bidder/Contractor must be prepared, if requested by the Commissioner, to present evidence of legal authority to do business in New York State, integrity, experience, ability, prior performance, organizational and financial capacity as well as where applicable, a statement as to supply, plant, machinery and capacity of the manufacturer or source for the production, distribution and servicing of the Product offered/Bid. If the Commissioner determines that the conditions and terms of the Bid Documents, Bid Specifications or Contract are not complied with, or that items, services or Product proposed to be furnished do not meet the specified requirements, or that the legal authority, integrity experience, ability, prior performance, organization and financial capacity or facilities are not satisfactory, the Commissioner may reject such Bid or terminate the Contract.

35. DISQUALIFICATION FOR PAST PERFORMANCE AND FINDINGS OF NON-RESPONSIBILITY Bidder may be disqualified from receiving awards if Bidder, or anyone in Bidder's employment, has previously failed to perform satisfactorily in connection with public Bidding or contracts or is deemed non-responsible.

36. QUANTITY CHANGES PRIOR TO AWARD The Commissioner reserves the right, at any time prior to the award of a specific quantity Contract, to alter in good faith the quantities listed in the Bid Specifications. In the event such right is exercised, the lowest responsible Bidder meeting Bid Specifications will be advised of the revised quantities and afforded an opportunity to extend or reduce its Bid price in relation to the changed quantities. Refusal by the low Bidder to so extend or reduce its Bid price may result in the rejection of its Bid and the award of such Contract to the lowest responsible Bidder who accepts the revised qualifications.

37. TIMEFRAME FOR OFFERS The Commissioner reserves the right to make awards within sixty (60) days after the date of the Bid opening or such other period of time as set forth in the Bid Documents, during which period, Bids must remain firm and cannot e withdrawn. Pursuant to Section 163(9)(e) of the State Finance Law and Section 2-205 of the Uniform Commercial Code when applicable, where an award is not made within the sixty (60) day period or other time specified as set forth in the Bid Documents, the Bids shall remain firm until such later time as either a Contract is awarded or the Bidder delivers to the Commissioner written notice of the withdrawal of its Bid. Any Bid which expressly states therein that acceptance must be made within a shorter specified time, may at the sole discretion of the Commissioner, be accepted or rejected.

TERMS & CONDITIONS

38. CONTRACT CREATION / EXECUTION Except for contracts governed by Article 11-B of the State Finance Law, subject to and upon receipt of all required approvals as set forth in the Bid Specifications a Contract shall be deemed executed and created with the successful Bidder(s), upon the Commissioner's mailing or electronic communication to the address on the Bid/Contract of: (i) the final Contract Award Notice; (ii) a fully executed Contract; or (iii) a Purchase Order authorized by the Commissioner.

39. PARTICIPATION IN CENTRALIZED CONTRACTS The following shall not limit or inhibit the OGS Commissioner's authority under State Finance Law, Section 163 (10) (e) (Piggybacking):

a. Agencies All State Agencies may utilize and purchase under any state Centralized Contract let by the Commissioner, unless the Bid Documents limit purchases to specific State Agencies.

b. Non-State Agency Authorized Users Authorized Users other than State Agencies are permitted to make purchases through state Centralized Contracts where permitted by law, the Contract or the Commissioner.

c. Voluntary Extension Purchase Orders issued against a State Centralized Contract by any Authorized User not provided for in the Bid Specifications shall be honored by the Contractor at its discretion and only with the approval of the OGS Commissioner and any other approvals required by law. Contractors are encouraged to voluntarily extend service Contracts to those additional entities authorized to utilize commodity Contracts under Section 163 (3) (iv) of the State Finance Law.

d. Responsibility for Performance Participation in state Centralized Contracts by Authorized Users is permitted upon the following conditions: (i) the responsibility with regard to performance of any contractual obligation, covenant, condition or term thereunder by any Authorized User other than State Agencies shall be borne and is expressly assumed by such Authorized User and not by the State; (ii) a breach of the Contract by any particular Authorized User shall neither constitute nor be deemed a breach of the Contract as a whole which shall remain in full force and effect, and shall not affect the validity of the Contract nor the obligations of the Contractor thereunder respecting non-breaching Authorized Users, whether State or otherwise; (iii) for a breach by an Authorized User other than a State Agency, the State specifically and expressly disclaims any and all liability for such breach; and (iv) each non-state agency Authorized User and Contractor guarantees to save the State, its officers, agents and employees harmless from any liability that may be or is imposed by their failure to perform in accordance with its obligations under the Contract.

e. Contract Migration Authorized Users holding individual Contracts with a Contractor at the time that Contractor is awarded a Centralized Contract for the same Products or services shall be permitted to migrate to that Centralized Contract effective with its commencement date. Such migration shall not operate to diminish, alter or eliminate any right that the Authorized User otherwise had under the terms and conditions of their individual Contract.

40. MODIFICATION OF CONTRACT TERMS The terms and conditions set forth in the Contract shall govern all transactions by Authorized User(s) under this Contract. The Contract may only be modified or amended upon mutual written agreement of the Commissioner and Contractor.

The Contractor may, however, offer Authorized User(s) more advantageous pricing, payment, or other terms and conditions than those set forth in the Contract. In such event, a copy of such terms shall be furnished to the Authorized User(s) and Commissioner by the Contractor at the time of such offer.

Other than where such terms are more advantageous for the Authorized User(s) than those set forth in the Contract, no alteration or modification of the terms of the Contract, including substitution of Product, shall be valid or binding against Authorized User(s) unless authorized by the Commissioner or specified in the Contract Award Notification. No such alteration or modification shall be made by unilaterally affixing such terms to Product upon delivery (including, but not limited to, attachment or inclusion of standard pre-printed order forms, product literature, "shrink wrap" terms accompanying software upon delivery, or other documents) or by incorporating such terms onto order forms, purchase orders or other documents forwarded by the Contractor for payment, notwithstanding Authorized User's subsequent acceptance of Product, or that Authorized User has subsequently processed such document for approval or payment.

41. SCOPE CHANGES The Commissioner reserves the right, unilaterally, to require, by written order, changes by altering, adding to or deducting from the Bid Specifications, such changes to be within the general scope of the Contract. The Commissioner may make an equitable adjustment in the Contract price or delivery date if the change affects the cost or time of performance. Such equitable adjustments require the consent of the Contractor, which consent shall not be unreasonably withheld.

42. ESTIMATED / SPECIFIC QUANTITY CONTRACTS Estimated quantity contracts are expressly agreed and understood to be made for only the quantities, if any, actually ordered during the Contract term. No guarantee of any quantity(s) is implied or given. Purchases by Authorized Users from Contracts for services and technology are voluntary.

With respect to any specific quantity stated in the contract, the Commissioner reserves the right after award to order up to 20% more or less (rounded to the next highest whole number) than the specific quantities called for in the Contract. Notwithstanding the foregoing, the Commissioner may purchase greater or lesser percentages of Contract quantities should the Commissioner and Contractor so agree. Such agreement may include an equitable price adjustment.

43. EMERGENCY CONTRACTS In the event that a disaster emergency is declared by Executive Order under Section 28 of Article 2-B of the Executive Law, or the Commissioner determines pursuant to his/her authority under Section 163 (10) (b) of the State Finance Law that an emergency exists requiring the prompt and immediate delivery of Product, the Commissioner reserves the right to obtain such Product from any source, including but not limited to this Contract(s), as the Commissioner in his/her sole discretion determines will meet the needs of such emergency. Contractor shall not be entitled to any claim or lost profits for Product procured from other sources pursuant to this paragraph. The reasons underlying the finding that an emergency exists shall be included in the procurement record.

44. PURCHASE ORDERS Unless otherwise authorized in writing by the Commissioner, no Product is to be delivered or furnished by Contractor until transmittal of an official Purchase Order from the Authorized User. Unless terminated or cancelled pursuant to the authority vested in the Commissioner, Purchase Orders shall be effective and binding upon the Contractor when placed in the mail or electronically transmitted prior to the termination of the contract period, addressed to the Contractor at the address for receipt of orders set forth in the Contract or in the Contract Award Notification.

All Purchase Orders issued pursuant to Contracts let by the Commissioner must bear the appropriate Contract number and, if necessary, required State approvals. As deemed necessary, the Authorized User may confirm pricing and other Product information with the Contractor prior to placement of the Purchase Order. The State reserves the right to require any other information from the Contractor which the State deems necessary in order to complete any Purchase Order placed under the Contract. Unless otherwise specified, all Purchase Orders against Centralized Contracts will be placed by Authorized Users directly with the Contractor and any discrepancy between the terms stated on the vendor's order form, confirmation or acknowledgment, and the Contract terms shall be resolved in favor of

the terms most favorable to the Authorized User. Should an Authorized User add written terms and conditions to the Purchase Order that conflict with the terms and conditions of the Contract, the Contractor has the option of rejecting the Purchase Order within five business days of its receipt but shall first attempt to negotiate the additional written terms and conditions in good faith with the Authorized User, or fulfill the Purchase Order. Notwithstanding the above, the Authorized User reserves the right to dispute any discrepancies arising from the presentation of additional terms and conditions with the Contractor.

If, with respect to an Agency Specific Contract let by the OGS Commissioner, a Purchase Order is not received by the Contractor within two weeks after the issuance of a Contract Award Notification, it is the responsibility of the Contractor to request in writing that the appropriate Authorized User forward a Purchase Order. If, thereafter, a Purchase Order is not received within a reasonable period of time, the Contractor shall promptly notify in writing the appropriate purchasing officer in OGS. Failure to timely notify such officer may, in the discretion of the OGS Commissioner and without cost to the State, result in the cancellation of such requirement by the OGS Commissioner with a corresponding reduction in the Contract quantity and price.

45. PRODUCT DELIVERY Delivery must be made as ordered to the address specified on the Purchase Order and in accordance with the terms of the Contract or Contract Award Notice. Unless otherwise specified in the Bid Documents, delivery shall be made within thirty calendar days after receipt of a Purchase Order by the Contractor. The decision of the Commissioner as to compliance with delivery terms shall be final. The burden of proof for delay in receipt of Purchase Order shall rest with the Contractor. In all instances of a potential or actual delay in delivery, the Contractor shall immediately notify the Commissioner and the Authorized User, and confirm in writing the explanation of the delay, and take appropriate action to avoid any subsequent late deliveries. Any extension of time for delivery must be requested in writing by the Contractor and approved in writing by the Authorized User. Failure to meet such delivery time schedule may be grounds for cancellation of the order or, in the Commissioner's discretion, the Contract.

46. WEEKEND AND HOLIDAY DELIVERIES Unless otherwise specified in the Bid Specifications or by an Authorized User, deliveries will be scheduled for ordinary business hours, Monday through Friday (excluding legal holidays observed by the State of New York). Deliveries may be scheduled by mutual agreement for Saturdays, Sundays or legal holidays observed by the State of New York where the Product is for daily consumption, an emergency exists, the delivery is a replacement, delivery is late, or other reasonable circumstance in which event the convenience of the Authorized User shall govern.

47. SHIPPING/RECEIPT OF PRODUCT

a. Packaging Tangible Product shall be securely and properly packed for shipment, storage and stocking in appropriate, clearly labeled shipping containers and according to accepted commercial practice, without any extra charges for packing materials, cases or other types of containers. The container shall become and remain the property of the Authorized User unless otherwise specified in the Contract documents.

b. Shipping Charges Unless otherwise stated in the Bid Specifications, all deliveries shall be deemed to be freight on board (F.O.B.) destination tailgate delivery at the dock of the Authorized User. Unless otherwise agreed, items purchased at a price F.O.B. Shipping point plus transportation charges shall not relieve the Contractor from responsibility for safe and proper delivery notwithstanding the Authorized User's payment of transportation charges. Contractor shall be responsible for ensuring that the Bill of Lading states "charges prepaid" for all shipments.

c. Receipt of Product The Contractor shall be solely responsible for assuring that deliveries are made to personnel authorized to accept delivery on behalf of the Authorized User. Any losses resulting from the Contractor's failure to deliver Product to authorized personnel shall be borne exclusively by the Contractor.

48. TITLE AND RISK OF LOSS Notwithstanding the form of shipment, title or other property interest, risk of loss shall not pass from the Contractor to the Authorized User until the Products have been received, inspected and accepted by the receiving entity. Acceptance shall occur within a reasonable time or in accordance with such other defined acceptance period as may be specified in the Bid Specifications or Purchase Order. Mere acknowledgment by Authorized User personnel of the delivery or receipt of goods (e.g., signed bill of lading) shall not be deemed or construed as acceptance of the Products received. Any delivery of Product that is substandard or does not comply with the Bid Specifications or Contract terms and conditions, may be rejected or accepted on an adjusted price basis, as determined by the Commissioner.

49. RE-WEIGHING PRODUCT Deliveries are subject to re-weighing at the point of destination by the Authorized User. If shrinkage occurs which exceeds that normally allowable in the trade, the Authorized User shall have the option to require delivery of the difference in quantity or to reduce the payment accordingly. Such option shall be exercised in writing by the Authorized User.

50. PRODUCT SUBSTITUTION In the event a specified manufacturer's Product listed in the Contract becomes unavailable or cannot be supplied by the Contractor for any reason (except as provided for in the Savings/Force Majeure Clause) a Product deemed in writing by the Commissioner to be equal to or better than the specified Product must be substituted by the Contractor at no additional cost or expense to the Authorized User. Unless otherwise specified, any substitution of Product prior to the Commissioner's written approval may be cause for cancellation of Contract.

51. REJECTED PRODUCT When Product is rejected, it must be removed by the Contractor from the premises of the Authorized User within ten calendar days of notification of rejection by the Authorized User. Upon notification of rejection, risk of loss of rejected or non-conforming Product shall remain with Contractor. Rejected items not removed by the Contractor within ten calendar days of notification shall be regarded as abandoned by the Contractor, and the Authorized User shall have the right to dispose of Product as its own property. The Contractor shall promptly reimburse the Authorized User for any and all costs and expenses incurred in storage or effecting removal or disposition after the ten-calendar day period.

52. INSTALLATION Where installation is required, Contractor shall be responsible for placing and installing the Product in the required locations. All materials used in the installation shall be of good quality and shall be free from any and all defects that would mar the appearance of the Product or render it structurally unsound. Installation includes the furnishing of any equipment, rigging and materials required to install or place the Product in the proper location. The Contractor shall protect the site from damage for all its work and shall repair damages or injury of any kind caused by the Contractor, its employees, officers or agents. If any alteration, dismantling or excavation, etc. is required to effect installation, the Contractor shall thereafter promptly restore the structure or site. Work shall be

performed to cause the least inconvenience to the Authorized User(s) and with proper consideration for the rights of other Contractors or workers. The Contractor shall promptly perform its work and shall coordinate its activities with those of other Contractors. The Contractor shall clean up and remove all debris and rubbish from its work as required or directed. Upon completion of the work, the building and surrounding area of work shall be left clean and in a neat, unobstructed condition, and everything in satisfactory repair and order.

53. REPAIRED OR REPLACED PARTS / COMPONENTS Where the Contractor is required to repair, replace or substitute Product or parts or components of the Product under the Contract, the repaired, replaced or substituted Products shall be subject to all terms and conditions for new parts and components set forth in the Contract including Warranties, as set forth in the Additional Warranties Clause herein. Replaced or repaired Product or parts and components of such Product shall be new and shall, if available, be replaced by the original manufacturer's component or part. Remanufactured parts or components meeting new Product standards may be permitted by the Commissioner or Authorized User. Before installation, all proposed substitutes for the original manufacturer's installed parts or components must be approved by the Authorized User. The part or component shall be equal to or of better quality than the original part or component being replaced.

54. ON-SITE STORAGE With the written approval of the Authorized User, materials, equipment or supplies may be stored at the Authorized User's site at the Contractor's sole risk.

55. EMPLOYEES, SUBCONTRACTORS & AGENTS All employees, Subcontractors or agents performing work under the Contract must be trained staff or technicians who meet or exceed the professional, technical and training qualifications set forth in the Bid Specifications or the Bid Documents, whichever is more restrictive, and must comply with all security and administrative requirements of the Authorized User. The Commissioner reserves the right to conduct a security background check or otherwise approve any employee, Subcontractor or agent furnished by Contractor and to refuse access to or require replacement of any personnel for cause based on, including but not limited to, professional, technical or training qualifications, quality of work or change in security status or non-compliance with Authorized User's security or other requirements. Such approval shall not relieve the Contractor of the obligation to perform all work in compliance with the Contract terms. The Commissioner reserves the right to reject and/or bar from the facility for cause any employee, Subcontractor, or agents of the Contractor.

56. ASSIGNMENT The Contractor shall not assign, transfer, convey, sublet, or otherwise dispose of the contract or its right, title or interest therein, or its power to execute such contract to any other person, company, firm or corporation in performance of the contract without the prior written consent of the Commissioner or Authorized User (as applicable). Failure to obtain consent to assignment from the Authorized User shall revoke and annul such Contract. Notwithstanding the foregoing, the State shall not hinder, prevent or affect assignment of money by a Contractor for the benefit of its creditors. Prior to a consent to assignment of monies becoming effective, the Contractor shall file a written notice of such monies assignment(s) with the Comptroller. Prior to a consent to assignment of a Contract, or portion thereof, becoming effective, the Contractor shall submit the request to assignment to the Commissioner and seek written agreement from the Commissioner which will be filed with the Comptroller. The Commissioner reserves the right to reject any proposed assignee in his/her discretion.

Upon notice to the Contractor, the Contract may be assigned without the consent of the Contractor to another State Agency or subdivision of the State pursuant to a governmental reorganization or assignment of functions under which the functions are transferred to a successor Agency or to another Agency that assumes OGS responsibilities for the Contract.

57. SUBCONTRACTORS AND SUPPLIERS The Commissioner reserves the right to reject any proposed Subcontractor or supplier for bona fide business reasons, which may include, but are not limited to: they are on the Department of Labor's list of companies with which New York State cannot do business; the Commissioner determines that the company is not qualified; the Commissioner determines that the company is not responsible; the company has previously provided unsatisfactory work or services; the company failed to solicit minority and women's business enterprises (M/WBE) Bidders as required by prior Contracts.

58. PERFORMANCE / BID BOND The Commissioner reserves the right to require a Bidder or Contractor to furnish without additional cost, a performance, payment or Bid bond or negotiable irrevocable letter of credit or other form of security for the faithful performance of the Contract. Where required, such bond or other security shall be in the form prescribed by the Commissioner.

59. SUSPENSION OF WORK The Commissioner, in his/her sole discretion, reserves the right to suspend any or all activities under this Contract, at any time, in the best interests of the Authorized User. In the event of such suspension, the Contractor will be given a formal written notice outlining the particulars of such suspension. Examples of the reason for such suspension include, but are not limited to, a budget freeze or reduction on State spending, declaration of emergency, contract compliance issues or other such circumstances. Upon issuance of such notice, the Contractor is not to accept any Purchase Orders, and shall comply with the suspension order. Activity may resume at such time as the Commissioner issues a formal written notice authorizing a resumption of performance under the Contract.

An Authorized User may issue a formal written notice for the suspension of work for which it has engaged the Contractor for reasons specified in the above paragraph. The written notice shall set forth the reason for such suspension and a copy of the written notice shall be provided to the Commissioner.

60. TERMINATION

a. For Cause: For a material breach that remains uncured for more than thirty (30) days or other specified period after written notice to the Contractor, the Contract or Purchase Order may be terminated by the Commissioner or Authorized User at the Contractor's expense where Contractor becomes unable or incapable of performing, or meeting any requirements or qualifications set forth in the Contract, or for non-performance, or upon a determination that Contractor is non-responsible. Such termination shall be upon written notice to the Contractor. In such event, the Commissioner or Authorized User may complete the contractual requirements in any manner it may deem advisable and pursue available legal or equitable remedies for breach.

b. For Convenience: By written notice, this Contract may be terminated at any time by the State for convenience upon sixty (60) days written notice or other specified period without penalty or other early termination charges due. Such termination of the Contract shall not affect any project or Purchase Order that has been issued under the Contract prior to the date of such termination. If the Contract is terminated pursuant to this subdivision, the Authorized User shall remain liable for all accrued but unpaid charges incurred through the date of the termination. Contractor shall use due diligence and provide any outstanding deliverables.

c. For Violation of the Sections 139-j and 139-k of the State Finance Law: The Commissioner reserves the right to terminate the Contract in the event it is found that the certification filed by the Bidder in accordance with Section 139-k of the State Finance Law was intentionally false or intentionally incomplete. Upon such finding, the Commissioner may exercise its termination right by providing written notification to the Contractor in accordance with the written notification terms of the Contract.

d. For Violation of Revised Tax Law 5a: The Commissioner reserves the right to terminate the contract in the event it is found that the certification filed by the Contractor in accordance with §5-a of the Tax Law is not timely filed during the term of the Contract or the certification furnished was intentionally false or intentionally incomplete. Upon such finding, the Commissioner may exercise its termination right by providing written notification to the Contractor.

61. SAVINGS/FORCE MAJEURE A force majeure occurrence is an event or effect that cannot be reasonably anticipated or controlled. Force majeure includes, but is not limited to, acts of God, acts of war, acts of public enemies, strikes, fires, explosions, actions of the elements, floods, or other similar causes beyond the control of the Contractor or the Commissioner in the performance of the Contract which non- performance, by exercise of reasonable diligence, cannot be prevented. Contractor shall provide the Commissioner with written notice of any force majeure occurrence as soon as the delay is known.

Neither the Contractor nor the Commissioner shall be liable to the other for any delay in or failure of performance under the Contract due to a force majeure occurrence. Any such delay in or failure of performance shall not constitute default or give rise to any liability for damages. The existence of such causes of such delay or failure shall extend the period for performance to such extent as determined by the Contractor and the Commissioner to be necessary to enable complete performance by the Contractor if reasonable diligence is exercised after the cause of delay or failure has been removed.

Notwithstanding the above, at the discretion of the Commissioner where the delay or failure will significantly impair the value of the Contract to the State or to Authorized Users, the Commissioner may:

a. Accept allocated performance or deliveries from the Contractor. The Contractor, however, hereby agrees to grant preferential treatment to Authorized Users with respect to Product subjected to allocation; and/or

b. Purchase from other sources (without recourse to and by the Contractor for the costs and expenses thereof) to replace all or part of the Products which are the subject of the delay, which purchases may be deducted from the Contract quantities without penalty or liability to the State; or

c. Terminate the Contract or the portion thereof which is subject to delays, and thereby discharge any unexecuted portion of the Contract or the relative part thereof.

In addition, the Commissioner reserves the right, in his/her sole discretion, to make an equitable adjustment in the Contract terms and/or pricing should extreme and unforeseen volatility in the marketplace affect pricing or the availability of supply. "Extreme and unforeseen volatility in the marketplace" is defined as market circumstances which meet the following criteria: (i) the volatility is due to causes outside the control of Contractor; (ii) the volatility affects the marketplace or industry, not just the particular Contract source of supply; (iii) the effect on pricing or availability of supply is substantial; and (iv) the volatility so affects Contractor's performance that continued performance of the Contract would result in a substantial loss.

62. CONTRACT BILLINGS Contractor and the distributors/resellers designated by the Contractor, if any, shall provide complete and accurate billing invoices to each Authorized User in order to receive payment. Billings for Authorized Users must contain all information required by the Contract and the State Comptroller. The State Comptroller shall render payment for Authorized User purchases, and such payment shall be made in accordance with ordinary State procedures and practices. Payment of Contract purchases made by Authorized Users, other than Agencies, shall be billed directly by Contractor on invoices/vouchers, together with complete and accurate supporting documentation as required by the Authorized User.

Submission of an invoice and payment thereof shall not preclude the Commissioner from reimbursement or demanding a price adjustment in any case where the Product delivered is found to deviate from the terms and conditions of the Contract or where the billing was inaccurate.

Contractor shall provide, upon request of the Commissioner, any and all information necessary to verify the accuracy of the billings. Such information shall be provided in the format requested by the Commissioner and in a media commercially available from the Contractor. The Commissioner may direct the Contractor to provide the information to the State Comptroller or to any Authorized User of the Contract.

63. DEFAULT – AUTHORIZED USER

a. Breach of Authorized User Not Breach of Centralized Contract. An Authorized User's breach shall not be deemed a breach of the Centralized Contract, rather it shall be deemed a breach of the Authorized User's performance under the terms and conditions of the Centralized Contract.

b. Failure to Make Payment. In the event a participating Authorized User fails to make payment to the Contractor for Products delivered, accepted and properly invoiced, within 60 days of such delivery and acceptance, the Contractor may, upon 10 days advance written notice to both the Commissioner and the Authorized User's purchasing official, suspend additional shipments of Product or provision of services to such entity until such time as reasonable arrangements have been made and assurances given by such entity for current and future Contract payments.

c. Notice of Breach. Notwithstanding the foregoing, the Contractor shall, at least 10 days prior to declaring a breach of Contract by any Authorized User, by certified or registered mail, notify both the Commissioner and the purchasing official of the breaching Authorized User of the specific facts, circumstances and grounds upon which a breach will be declared.

d. It is understood, however, that if the Contractor's basis for declaring a breach is insufficient, the Contractor's declaration of breach and failure to service an Authorized User shall constitute a breach of its Contract and the Authorized User may thereafter seek any remedy available at law or equity.

64. INTEREST ON LATE PAYMENTS

a. State Agencies The payment of interest on certain payments due and owed by Agency may be made in accordance with Article 11-A of the State Finance Law (SFL §179-d et. Seq.) and Title 2 of the New York Code of Rules and Regulations, Part 18 (Implementation of Prompt Payment Legislation -2 NYCRR §18.1 et seq.).

b. By Non-State Agencies The terms of Article 11-A apply only to procurements by and the consequent payment obligations of Agencies. Neither expressly nor by any implication is the statute applicable to Non-State Authorized Users. Neither OGS nor the State Comptroller is responsible for payments on any purchases made by a Non-State Agency Authorized User.

c. By Contractor Should the Contractor be liable for any payments to the State hereunder, interest, late payment charges and collection fee charges will be determined and assessed pursuant to Section 18 of the State Finance Law.

65. REMEDIES FOR BREACH It is understood and agreed that all rights and remedies afforded below shall be in addition to all remedies or actions otherwise authorized or permitted by law:

a. Cover/Substitute Performance In the event of Contractor's material breach, the Commissioner may, with or without formally Bidding: (i) Purchase from other sources; or (ii) If the Commissioner is unsuccessful after making reasonable attempts, under the circumstances then existing, to timely obtain acceptable service or acquire replacement Product of equal or comparable quality, the Commissioner may acquire acceptable replacement Product of lesser or greater quality.

Such purchases may, in the discretion of the Commissioner, be deducted from the Contract quantity and payments due Contractor.

b. Withhold Payment In any case where a question of non-performance by Contractor arises, payment may be withheld in whole or in part at the discretion of the Commissioner. Should the amount withheld be finally paid, a cash discount originally offered may be taken as if no delay in payment had occurred.

c. Bankruptcy In the event that the Contractor files a petition under the U.S. Bankruptcy Code during the term of this Centralized Contract, Authorized Users may, at their discretion, make application to exercise its right to set-off against monies due the Debtor or, under the Doctrine of Recoupment, credit the Authorized User the amounts owed by the Contractor arising out of the same transactions.

d. Reimbursement of Costs Incurred The Contractor agrees to reimburse the Authorized User promptly for any and all additional costs and expenses incurred for acquiring acceptable services, and/or replacement Product. Should the cost of cover be less than the Contract price, the Contractor shall have no claim to the difference. The Contractor covenants and agrees that in the event suit is successfully prosecuted for any default on the part of the Contractor, all costs and expenses expended or incurred by the Authorized User in connection therewith, including reasonable attorney's fees, shall be paid by the Contractor.

Where the Contractor fails to timely deliver pursuant to the guaranteed delivery terms of the Contract, the ordering Authorized User may rent substitute equipment temporarily. Any sums expended for such rental shall, upon demand, be reimbursed to the Authorized User promptly by the Contractor or deducted by the Authorized User from payments due or to become due the Contractor on the same or another transaction.

e. Deduction/Credit Sums due as a result of these remedies may be deducted or offset by the Authorized User from payments due, or to become due, the Contractor on the same or another transaction. If no deduction or only a partial deduction is made in such fashion the Contractor shall pay to the Authorized User the amount of such claim or portion of the claim still outstanding, on demand. The Commissioner reserves the right to determine the disposition of any rebates, settlements, restitution, liquidated damages, etc., which arise from the administration of the Contract.

66. ASSIGNMENT OF CLAIM Contractor hereby assigns to the State any and all its claims for overcharges associated with this Contract which may arise under the antitrust laws of the United States, 15 USC Section 1, et. seq. and the antitrust laws of the State of New York, General Business Law Section 340, et. seq.

67. TOXIC SUBSTANCES Each Contractor furnishing a toxic substance as defined by Section 875 of the Labor Law, shall provide such Authorized User with not less than two copies of a material safety data sheet, which sheet shall include for each such substance the information outlined in Section 876 of the Labor Law.

Before any chemical product is used or applied on or in any building, a copy of the product label and Material Safety Data Sheet must be provided to and approved by the Authorized User agency representative.

68. INDEPENDENT CONTRACTOR It is understood and agreed that the legal status of the Contractor, its agents, officers and employees under this Contract is that of an independent Contractor, and in no manner shall they be deemed employees of the Authorized User, and therefore are not entitled to any of the benefits associated with such employment. The Contractor agrees, during the term of this Contract, to maintain at Contractor's expense those benefits to which its employees would otherwise be entitled by law, including health benefits, and all necessary insurance for its employees, including worker's compensation, disability and unemployment insurance, and to provide the Authorized User with certification of such insurance upon request. The Contractor remains responsible for all applicable federal, state and local taxes, and all FICA contributions.

69. SECURITY Contractor warrants, covenants and represents that it will comply fully with all security procedures of the Authorized User(s) in performance of the Contract including but not limited to physical, facility, documentary and cyber security rules, procedures and protocols.

70. COOPERATION WITH THIRD PARTIES The Contractor shall be responsible for fully cooperating with any third party, including but not limited to other Contractors or Subcontractors of the Authorized User, as necessary to ensure delivery of Product or coordination of performance of services.

71. CONTRACT TERM - RENEWAL In addition to any stated renewal periods in the Contract, any Contract or unit portion thereof let by the Commissioner may be extended by the Commissioner for an additional period(s) of up to one year with the written concurrence of the Contractor and Comptroller. Such extension may be exercised on a month to month basis or in other stated periods of time during the one year extension.

72. ADDITIONAL WARRANTIES Where Contractor, product manufacturer or service provider generally offers additional or more advantageous warranties than set forth below, Contractor shall offer or pass through any such warranties to Authorized Users. Contractor hereby warrants and represents:

a. Product Performance Contractor warrants and represents that Products delivered pursuant to this Contract conform to the manufacturer's specifications, performance standards and documentation, and the documentation fully describes the proper procedure for using the Products.

b. Title and Ownership Warranty Contractor warrants, represents and conveys (i) full ownership, clear title free of all liens, or (ii) the right to transfer or deliver perpetual license rights to any Products transferred to Authorized User under this Contract. Contractor shall be solely liable for any costs of acquisition associated therewith. Contractor fully indemnifies the Authorized User for any loss, damages or actions arising from a breach of said warranty without limitation.

c. Contractor Compliance Contractor represents and warrants to pay, at its sole expense, for all applicable permits, licenses, tariffs, tolls and fees to give all notices and comply with all laws, ordinances, rules and regulations of any governmental entity in conjunction with the performance of obligations under the Contract. Prior to award and during the Contract term and any renewals thereof, Contractor must establish to the satisfaction of the Commissioner that it meets or exceeds all requirements of the Bid/Contract and any applicable laws, including but not limited to, permits, insurance coverage, licensing, proof of coverage for worker's compensation, and shall provide such proof as required by the Commissioner. Failure to do so may constitute grounds for the Commissioner to cancel or suspend this Contract, in whole or in part, or to take any other action deemed necessary by the Commissioner.

d. Product Warranty Unless recycled or recovered materials are available in accordance with the "Recycled or Recovered Materials" clause, Product offered shall be standard new equipment, current model or most recent release of regular stock product with all parts regularly used with the type of equipment offered; and no attachment or part has been substituted or applied contrary to the manufacturer's recommendations and standard practice.

Contractor further warrants and represents that components or deliverables specified and furnished by or through Contractor shall individually, and where specified and furnished as a system, be substantially uninterrupted or error-free in operation and guaranteed against faulty material and workmanship for the warranty period, or for a minimum of one (1) year from the date of acceptance, whichever is longer ("Project warranty period"). During the Project warranty period, defects in the materials or workmanship of components or deliverables specified and furnished by or through Contractor shall be repaired or replaced by Contractor at no cost or expense to the Authorized User. Contractor shall extend the Project warranty period for individual component(s), or for the System as a whole, as applicable, by the cumulative period(s) of time, after notification, during which an individual component or the System requires servicing or replacement (down time) or is in the possession of the Contractor, its agents, officers, Subcontractors, distributors, resellers or employees ("extended warranty").

Where Contractor, the Independent Software Vendor "ISV," or other third party manufacturer markets any Project Deliverable delivered by or through Contractor with a standard commercial warranty, such standard warranty shall be in addition to, and not relieve the Contractor from, Contractor's warranty obligations during the project warranty and extended warranty period(s). Where such standard commercial warranty covers all or some of the Project warranty or extended warranty period(s), Contractor shall be responsible for the coordination during the Project warranty or extended warranty period(s) with ISV or other third party manufacturer(s) for warranty repair or replacement of ISV or other third party manufacturer's Product.

Where Contractor, ISV or other third party manufacturer markets any Project Deliverable with a standard commercial warranty which goes beyond the Project warranty or extended warranty period(s), Contractor shall notify the Authorized User and pass through the manufacturer's standard commercial warranty to Authorized User at no additional charge; provided, however, that Contractor shall not be responsible for coordinating services under the third party extended warranty after expiration of the Project warranty and extended warranty period(s).

e. Replacement Parts Warranty If during the regular or extended warranty period's faults develop, the Contractor shall promptly repair or, upon demand, replace the defective unit or component part affected. All costs for labor and material and transportation incurred to repair or replace defective Product during the warranty period shall be borne solely by the Contractor, and the State or Authorized User shall in no event be liable or responsible therefor.

Any part of component replaced by the Contractor under the Contract warranty shall be replaced at no cost to the Authorized User and guaranteed for the greater of: a) the warranty period under paragraph (d) above; or b) if a separate warranty for that part or component is generally offered by the manufacturer, the standard commercial warranty period offered by the manufacturer for the individual part or component.

f. Virus Warranty The Contractor represents and warrants that Licensed Software contains no known viruses. Contractor is not responsible for viruses introduced at Licensee's site.

g. Date/Time Warranty Contractor warrants that Product(s) furnished pursuant to this Contract shall, when used in accordance with the Product documentation, be able to accurately process date/time data (including, but not limited to, calculating, comparing, and sequencing) transitions, including leap year calculations. Where a Contractor proposes or an acquisition requires that specific Products must perform as a package or system, this warranty shall apply to the Products as a system.

Where Contractor is providing ongoing services, including but not limited to: i) consulting, integration, code or data conversion, ii) maintenance or support services, iii) data entry or processing, or iv) contract administration services (e.g., billing, invoicing, claim processing), Contractor warrants that services shall be provided in an accurate and timely manner without interruption, failure or error due to the inaccuracy of Contractor's business operations in processing date/time data (including, but not limited to, calculating, comparing, and sequencing) various date/time transitions, including leap year calculations. Contractor shall be responsible for damages resulting from any delays, errors or untimely performance resulting therefrom, including but not limited to the failure or untimely performance of such services.

This Date/Time Warranty shall survive beyond termination or expiration of this contract through: a) ninety (90) days or b) the Contractor's or Product manufacturer/developer's stated date/time warranty term, whichever is longer. Nothing in this warranty statement shall be construed to limit any rights or remedies otherwise available under this Contract for breach of warranty.

h. Workmanship Warranty Contract warrants that all components or deliverables specified and furnished by or through Contractor under the Project Definition/Work Order meet the completion criteria set forth in the Project Definition/Work Order and any subsequent statement(s) of work, and that services will be provided in a workmanlike manner in accordance with industry standards.

i. Survival of Warranties All warranties contained in this Contract shall survive the termination of this Contract.

73. LEGAL COMPLIANCE Contractor represents and warrants that it shall secure all notices and comply with all laws, ordinances, rules and regulations of any governmental entity in conjunction with the performance of obligations under the Contract. Prior to award and during the Contract term and any renewals thereof, Contractor must establish to the satisfaction of the Commissioner that it meets or exceeds all requirements of the Bid and Contract and any applicable laws, including but not limited to, permits, licensing, and shall provide such proof as required by the Commissioner. Failure to comply or failure to provide proof may constitute grounds for the Commissioner to cancel or suspend the Contract, in whole or in part, or to take any other action deemed necessary by the Commissioner. Contractor also agrees to disclose information and provide affirmations and certifications to comply with Sections 139-j and 139-k of the State Finance Law.

74. INDEMNIFICATION Contractor shall be fully liable for the actions of its agents, employees, partners or Subcontractors and shall fully indemnify and save harmless the Authorized Users from suits, actions, damages and costs of every name and description relating to personal injury and damage to real or personal tangible property caused by any intentional act or negligence of Contractor, its agents, employees, partners or Subcontractors, without limitation; provided, however, that the Contractor shall not indemnify for that portion of any claim, loss or damage arising hereunder due to the negligent act or failure to act of the Authorized Users.

75. INDEMNIFICATION RELATING TO THIRD PARTY RIGHTS The Contractor will also indemnify and hold the Authorized Users harmless from and against any and all damages, expenses (including reasonable attorneys' fees), claims, judgments, liabilities and costs that may be finally assessed against the Authorized Users in any action for infringement of a United States Letter Patent, or of any copyright, trademark, trade secret or other third party proprietary right except to the extent such claims arise from the Authorized Users gross negligence or willful misconduct, provided that the State shall give Contractor: (i) prompt written notice of any action, claim or threat of infringement suit, or other suit, (ii) the opportunity to take over, settle or defend such action, claim or suit at Contractor's sole expense, and (iii) assistance in the defense of any such action at the expense of Contractor.

If usage shall be enjoined for any reason or if Contractor believes that it may be enjoined, Contractor shall have the right, at its own expense and sole discretion to take action in the following order of precedence: (i) to procure for the Authorized User the right to continue Usage (ii) to modify the service or Product so that Usage becomes non-infringing, and is of at least equal quality and performance; or (iii) to replace said service or Product or part(s) thereof, as applicable, with non-infringing service or Product of at least equal quality and performance. If the above remedies are not available, the parties shall terminate the Contract, in whole or in part as necessary and applicable, provided the Authorized User is given a refund for any amounts paid for the period during which Usage was not feasible.

The foregoing provisions as to protection from third party rights shall not apply to any infringement occasioned by modification by the Authorized User of any Product without Contractor's approval.

In the event that an action at law or in equity is commenced against the Authorized User arising out of a claim that the Authorized User's use of the service or Product under the Contract infringes any patent, copyright or proprietary right, and Contractor is of the opinion that the allegations in such action in whole or in part are not covered by the indemnification and defense provisions set forth in the Contract, Contractor shall immediately notify the Authorized User and the Office of the Attorney General in writing and shall specify to what extent Contractor believes it is obligated to defend and indemnify under the terms and conditions of the Contract. Contractor shall in such event protect the interests of the Authorized User and secure a continuance to permit the Authorized User to appear and defend its interests in cooperation with Contractor, as is appropriate, including any jurisdictional defenses the Authorized User may have. This constitutes the Authorized User's sole and exclusive remedy for patent infringement, or for infringement of any other third party proprietary right.

76. LIMITATION OF LIABILITY Except as otherwise set forth in the Indemnification Paragraphs above, the limit of liability shall be as follows:

a. Contractor's liability for any claim, loss or liability arising out of, or connected with the Products and services provided, and whether based upon default, or other liability such as breach of contract, warranty, negligence, misrepresentation or otherwise, shall in no case exceed direct damages in: (i) an amount equal to two (2) times the charges specified in the Purchase Order for the Products and services, or parts thereof forming the basis of the Authorized User's claim, (said amount not to exceed a total of twelve (12) months charges payable under the applicable Purchase Order) or (ii) one million dollars ($1,000,000), whichever is greater.

b. The Authorized User may retain such monies from any amount due Contractor as may be necessary to satisfy any claim for damages, costs and the like asserted against the Authorized User unless Contractor at the time of the presentation of claim shall demonstrate to the Authorized User's satisfaction that sufficient monies are set aside by the Contractor in the form of a bond or through insurance coverage to cover associated damages and other costs.

c. Notwithstanding the above, neither the Contractor nor the Authorized User shall be liable for any consequential, indirect or special damages of any kind which may result directly or indirectly from such performance, including, without limitation, damages resulting from loss of use or loss of profit by the Authorized User, the Contractor, or by others.

77. INSURANCE Contractor shall secure and maintain insurance coverage as specified in the Bid Documents and shall promptly provide documentation of specified coverages to the Authorized User. If specified, the Contractor may be required to add the Authorized User as an additional insured.

THE FOLLOWING CLAUSES PERTAIN TO TECHNOLOGY & NEGOTIATED CONTRACTS

78. SOFTWARE LICENSE GRANT Where Product is acquired on a licensed basis the following shall constitute the license grant:

a. License Scope Licensee is granted a non-exclusive, perpetual license to use, execute, reproduce, display, perform, or merge the Product within its business enterprise in the United States up to the maximum licensed capacity stated on the Purchase Order. Product may be accessed, used, executed, reproduced, displayed or performed up to the capacity measured by the applicable licensing unit stated on the Purchase Order (i.e., payroll size, number of employees, CPU, MIPS, MSU, concurrent user, workstation). Licensee shall have the right to use and distribute modifications or customizations of the Product to and for use by any Authorized Users otherwise licensed to use the Product, provided that any modifications, however extensive, shall not diminish Licensor's proprietary title or interest. No license, right or

interest in any trademark, trade name, or service mark is granted hereunder.

b. License Term The license term shall commence upon the License Effective Date, provided, however, that where an acceptance or trial period applies to the Product, the License Term shall be extended by the time period for testing, acceptance or trial.

c. Licensed Documentation If commercially available, Licensee shall have the option to require the Contractor to deliver, at Contractor's expense: (i) one (1) hard copy and one (1) master electronic copy of the Documentation in a mutually agreeable format; (ii) based on hard copy instructions for access by downloading from the Internet (iii) hard copies of the Product Documentation by type of license in the following amounts, unless otherwise mutually agreed:

- Individual/Named User License - one (1) copy per License
- Concurrent Users - 10 copies per site
- Processing Capacity - 10 copies per site

Software media must be in a format specified by the Authorized User, without requiring any type of conversion.

Contractor hereby grants to Licensee a perpetual license right to make, reproduce (including downloading electronic copies of the Product) and distribute, either electronically or otherwise, copies of Product Documentation as necessary to enjoy full use of the Product in accordance with the terms of license.

d. Product Technical Support & Maintenance Licensee shall have the option of electing the Product technical support and maintenance ("maintenance") set forth in the Contract by giving written notice to Contractor any time during the Centralized Contract term. Maintenance term(s) and any renewal(s) thereof are independent of the expiration of the Centralized Contract term and will not automatically renew.

Maintenance shall include, at a minimum, (i) the provision of error corrections, updates, revisions, fixes, upgrade and new releases to Licensee, and (ii) Help Desk assistance with locally accessible "800" or toll free, local telephone service, or alternatively on-line Help Desk accessibility. Contractor shall maintain the Products so as to provide Licensee with the ability to utilize the Products in accordance with the Product documentation without significant functional downtime to its ongoing business operations during the maintenance term.

Authorized User shall not be required to purchase maintenance for use of Product, and may discontinue maintenance at the end of any current maintenance term upon notice to Contractor. In the event that Authorized User does not initially acquire or discontinues maintenance of licensed Product, it may, at any time thereafter, reinstate maintenance for Product without any additional penalties or other charges, by paying Contractor the amount which would have been due under the Contract for the period of time that such maintenance had lapsed, at then current NYS net maintenance rates.

e. Permitted License Transfers As Licensee's business operations may be altered, expanded or diminished, licenses granted hereunder may be transferred or combined for use at an alternative or consolidated site not originally specified in the license, including transfers between Agencies ("permitted license transfers"). Licensee(s) do not have to obtain the approval of Contractor for permitted license transfers, but must give thirty (30) days prior written notice to Contractor of such move(s) and certify in writing that the Product is not in use at the prior site. There shall be no additional license or other transfer fees due Contractor, provided that: i) the maximum capacity of the consolidated machine is equal to the combined individual license capacity of all licenses running at the consolidated or transferred site (e.g., named users, seats, or MIPS); or ii) if the maximum capacity of the consolidated machine is greater than the individual license capacity being transferred, a logical or physical partition or other means of restricting access will be maintained within the computer system so as to restrict use and access to the Product to that unit of licensed capacity solely dedicated to beneficial use for Licensee. In the event that the maximum capacity of the consolidated machine is greater than the combined individual license capacity of all licenses running at the consolidated or transferred site, and a logical or physical partition or other means of restricting use is not available, the fees due Contractor shall not exceed the fees otherwise payable for a single license for the upgrade capacity.

f. Restricted Use By Outsourcers / Facilities Management, Service Bureaus / or Other Third Parties Outsourcers, facilities management or service bureaus retained by Licensee shall have the right to use the Product to maintain Licensee's business operations, including data processing, for the time period that they are engaged in such activities, provided that: 1) Licensee gives notice to Contractor of such party, site of intended use of the Product, and means of access; and 2) such party has executed, or agrees to execute, the Product manufacturer's standard nondisclosure or restricted use agreement which executed agreement shall be accepted by the Contractor ("Non-Disclosure Agreement"); and 3) if such party is engaged in the business of facility management, outsourcing, service bureau or other services, such third party will maintain a logical or physical partition within its computer system so as to restrict use and access to the program to that portion solely dedicated to beneficial use for Licensee. In no event shall Licensee assume any liability for third party's compliance with the terms of the Non-Disclosure Agreement, nor shall the Non-Disclosure Agreement create or impose any liabilities on the State or Licensee.

Any third party with whom a Licensee has a relationship for a state function or business operation, shall have the temporary right to use Product (e.g., JAVA Applets), provided that such use shall be limited to the time period during which the third party is using the Product for the function or business activity.

g. Archival Back-Up and Disaster Recovery Licensee may use and copy the Product and related Documentation in connection with: i) reproducing a reasonable number of copies of the Product for archival backup and disaster recovery procedures in the event of destruction or corruption of the Product or disasters or emergencies which require Licensee to restore backup(s) or to initiate disaster recovery procedures for its platform or operating systems; ii) reproducing a reasonable number of copies of the Product and related Documentation for cold site storage. "Cold Site" storage shall be defined as a restorable back-up copy of the Product not to be installed until and after the declaration by the Licensee of a disaster; iii) reproducing a back-up copy of the Product to run for a reasonable period of time in conjunction with a documented consolidation or transfer otherwise allowed herein. "Disaster Recovery" shall be defined as the installation and storage of Product in ready-to-execute, back-up computer systems prior to disaster or breakdown which is not used for active production or development.

h. Confidentiality Restrictions The Product is a trade secret, copyrighted and proprietary product. Licensee and its employees will keep the Product strictly confidential, and Licensee will not disclose or otherwise distribute or reproduce any Product to anyone other than as

authorized under the terms of Contract. Licensee will not remove or destroy any proprietary markings of Contractor.

i. Restricted Use by Licensee Except as expressly authorized by the terms of license, Licensee shall not:

(i) Copy the Product;

(ii) Cause or permit reverse compilation or reverse assembly of all or any portion of the Product;

(iii) Export the Licensed Software in violation of any U.S. Department of Commerce export administration regulations.

79. PRODUCT ACCEPTANCE Unless otherwise provided by mutual agreement of the Authorized User and the Contractor, Authorized User(s) shall have thirty (30) days from the date of delivery to accept hardware products and sixty (60) days from the date of delivery to accept all other Product. Where the Contractor is responsible for installation, acceptance shall be from completion of installation. Failure to provide notice of acceptance or rejection or a deficiency statement to the Contractor by the end of the period provided for under this clause constitutes acceptance by the Authorized User(s) as of the expiration of that period. The License Term shall be extended by the time periods allowed for trial use, testing and acceptance unless the Commissioner or Authorized User agrees to accept the Product at completion of trial use.

Unless otherwise provided by mutual agreement of the Authorized User and the Contractor, Authorized User shall have the option to run testing on the Product prior to acceptance, such tests and data sets to be specified by User. Where using its own data or tests, Authorized User must have the tests or representative set of data available upon delivery. This demonstration will take the form of a documented installation test, capable of observation by the Authorized User, and shall be made part of the Contractor's standard documentation. The test data shall remain accessible to the Authorized User after completion of the test.

In the event that the documented installation test cannot be completed successfully within the specified acceptance period, and the Contractor or Product is responsible for the delay, Authorized User shall have the option to cancel the order in whole or in part, or to extend the testing period for an additional thirty (30) day increment. Authorized User shall notify Contractor of acceptance upon successful completion of the documented installation test. Such cancellation shall not give rise to any cause of action against the Authorized User for damages, loss of profits, expenses, or other remuneration of any kind.

If the Authorized User elects to provide a deficiency statement specifying how the Product fails to meet the specifications within the testing period, Contractor shall have thirty (30) days to correct the deficiency, and the Authorized User shall have an additional sixty (60) days to evaluate the Product as provided herein. If the Product does not meet the specifications at the end of the extended testing period, Authorized User, upon prior written notice to Contractor, may then reject the Product and return all defective Product to Contractor, and Contractor shall refund any monies paid by the Authorized User to Contractor therefor. Costs and liabilities associated with a failure of the Product to perform in accordance with the functionality tests or product specifications during the acceptance period shall be borne fully by Contractor to the extent that said costs or liabilities shall not have been caused by negligent or willful acts or omissions of the Authorized User's agents or employees. Said costs shall be limited to the amounts set forth in the Limitation of Liability Clause for any liability for costs incurred at the direction or recommendation of Contractor.

80. AUDIT OF LICENSED PRODUCT USAGE Contractor shall have the right to periodically audit, no more than annually, at Contractor's expense, use of licensed Product at any site where a copy of the Product resides provided that: (i) Contractor gives Licensee(s) at least thirty (30) days advance written notice, (ii) such audit is conducted during such party's normal business hours, (iii) the audit is conducted by an independent auditor chosen on mutual agreement of the parties. Contractor shall recommend a minimum of three (3) auditing/accounting firms from which the Licensee will select one (1). In no case shall the Business Software Alliance (BSA), Software Publishers Association (SPA), Software and Industry Information Association (SIIA) or Federation Against Software Theft (FAST) be used directly or indirectly to conduct audits, or be recommended by Contractor; (iv) Contractor and Licensee are each entitled to designate a representative who shall be entitled to participate, and who shall mutually agree on audit format, and simultaneously review all information obtained by the audit. Such representatives also shall be entitled to copies of all reports, data or information obtained from the audit; and (v) if the audit shows that such party is not in compliance, Licensee shall be required to purchase additional licenses or capacities necessary to bring it into compliance and shall pay for the unlicensed capacity at the NYS Net Price in effect at time of audit, or if none, then at the Contractor's U.S. Commercial list price. Once such additional licenses or capacities are purchased, Licensee shall be deemed to have been in compliance retroactively, and Licensee shall have no further liability of any kind for the unauthorized use of the software.

81. OWNERSHIP/TITLE TO PROJECT DELIVERABLES

a. Definitions

(i) For purposes of this paragraph, "Products." A deliverable furnished under this Contract by or through Contractor, including existing and custom Products, including, but not limited to: a) components of the hardware environment, b) printed materials (including but not limited to training manuals, system and user documentation, reports, drawings), whether printed in hard copy or maintained on diskette, CD, DVD or other electronic media c) third party software, d) modifications, customizations, custom programs, program listings, programming tools, data, modules, components, and e) any properties embodied therein, whether in tangible or intangible form (including but not limited to utilities, interfaces, templates, subroutines, algorithms, formulas, source code, object code).

(ii) For purposes of this paragraph, "Existing Products." Tangible Products and intangible licensed Products that exist prior to the commencement of work under the Contract. Contractor bears the burden of proving that a particular product was in existence prior to the commencement of the Project.

(iii) For purposes of this paragraph, "Custom Products." Products, preliminary, final or otherwise, which are created or developed by Contractor, its Subcontractors, partners, employees or agents for Authorized User under the Contract.

b. Title to Project Deliverables Contractor acknowledges that it is commissioned by the Authorized User to perform the services detailed in the Purchase Order. Unless otherwise specified in writing in the Bid or Purchase Order, the Authorized User shall have ownership and license rights as follows:

(i) Existing Products:

1. Hardware - Title and ownership of Existing Hardware Product shall pass to Authorized User upon Acceptance.

2. Software - Title and ownership to Existing Software Product(s) delivered by Contractor under the Contract that is normally commercially distributed on a license basis by the Contractor or other independent software vendor proprietary owner ("Existing Licensed

Product"), whether or not embedded in, delivered or operating in conjunction with hardware or Custom Products, shall remain with Contractor or the proprietary owner of other independent software vendor(s) (ISV). Effective upon acceptance, such Product shall be licensed to Authorized User in accordance with the Contractor or ISV owner's standard license agreement, provided, however, that such standard license, must, at a minimum: (a) grant Authorized User a non-exclusive, perpetual license to use, execute, reproduce, display, perform, adapt (unless Contractor advises Authorized User as part of Contractor's proposal that adaptation will violate existing agreements or statutes and Contractor demonstrates such to the Authorized User's satisfaction) and distribute Existing Licensed Product to the Authorized User up to the license capacity stated in the Purchase Order or work order with all license rights necessary to fully effect the general business purpose(s) stated in the Bid or Authorized User's Purchase Order or work order, including the financing assignment rights set forth in paragraph (c) below; and (b) recognize the State of New York as the licensee where the Authorized User is a state agency, department, board, commission, office or institution. Where these rights are not otherwise covered by the ISV's owner's standard license agreement, the Contractor shall be responsible for obtaining these rights at its sole cost and expense. The Authorized User shall reproduce all copyright notices and any other legend of ownership on any copies authorized under this paragraph.

(**ii.) Custom Products**: Effective upon creation of Custom Products, Contractor hereby conveys, assigns and transfers to Authorized User the sole and exclusive rights, title and interest in Custom Product(s), whether preliminary, final or otherwise, including all trademark and copyrights. Contractor hereby agrees to take all necessary and appropriate steps to ensure that the Custom Products are protected against unauthorized copying, reproduction and marketing by or through Contractor, its agents, employees, or Subcontractors. Nothing herein shall preclude the Contractor from otherwise using the related or underlying general knowledge, skills, ideas, concepts, techniques and experience developed under a Purchase Order, project definition or work order in the course of Contractor's business. Authorized User may, by providing written notice thereof to the Contractor, elect in the alternative to take a non-exclusive perpetual license to Custom Products in lieu of Authorized User taking exclusive ownership and title to such Products. In such case, Licensee on behalf of all Authorized Users shall be granted a non-exclusive perpetual license to use, execute, reproduce, display, perform, adapt and distribute Custom Product as necessary to fully effect the general business purpose(s) as stated in paragraph (b)(i)(2), above.

c. Transfers or Assignments to a Third Party Financing Agent It is understood and agreed by the parties that a condition precedent to the consummation of the purchase (s) under the Contract may be the obtaining of acceptable third party financing by the Authorized User. The Authorized User shall make the sole determination of the acceptability of any financing proposal. The Authorized User will make all reasonable efforts to obtain such financing, but makes no representation that such financing has been obtained as of the date of Bid receipt. Where financing is used, Authorized User may assign or transfer its rights in Licensed Products (existing or custom) to a third party financing entity or trustee ("Trustee") as collateral where required by the terms of the financing agreement. Trustee's sole rights with respect to transferability or use of Licensed Products shall be to exclusively sublicense to Authorized User all of its Licensee's rights under the terms and conditions of the License Agreement; provided, further, however, in the event of any termination or expiration of such sublicense by reason of payment in full, all of Trustee's rights in such Licensed Product shall terminate immediately and Authorized User's prior rights to such Existing Licensed Product shall be revived.

d. Sale or License of Custom Products Involving Tax-Exempt Financing (i.e., Certificates of Participation - COPS) The Authorized User's sale or other transfer of Custom Products which were acquired by the Authorized User using third party, tax-exempt financing may not occur until such Custom Products are, or become, useable. In the event that the Contractor wishes to obtain ownership rights to Custom Product(s), the sale or other transfer shall be at fair market value determined at the time of such sale or other transfer, and must be pursuant to a separate written agreement in a form acceptable to the Authorized User which complies with the terms of this paragraph.

e. Contractor's Obligation with Regard to ISV (Third Party) Product Where Contractor furnishes Existing Licensed Product(s) as a Project Deliverable, and sufficient rights necessary to effect the purposes of this section are not otherwise provided in the Contractor or ISV's standard license agreement, Contractor shall be responsible for obtaining from the ISV third party proprietary owner/developer the rights set forth herein to the benefit of the Authorized User at Contractor's sole cost and expense.

82. PROOF OF LICENSE The Contractor must provide to each Licensee who places a Purchase Order either: (i) the Product developer's certified License Confirmation Certificates in the name of such Licensee; or (ii) a written confirmation from the Proprietary owner accepting Product invoice as proof of license. Contractor shall submit a sample certificate, or alternatively such written confirmation from the proprietary developer. Such certificates must be in a form acceptable to the Licensee.

83. PRODUCT VERSION Purchase Orders shall be deemed to reference Manufacturer's most recently released model or version of the Product at time of order, unless an earlier model or version is specifically requested in writing by Authorized User and Contractor is willing to provide such version.

84. CHANGES TO PRODUCT OR SERVICE OFFERINGS

a. Product or Service Discontinuance Where Contractor is the Product Manufacturer/Developer, and Contractor publicly announces to all U.S. customers ("date of notice") that a Product is being withdrawn from the U.S. market or that maintenance service or technical support provided by Contractor ("withdrawn support") is no longer going to be offered, Contractor shall be required to: (i) notify the Commissioner, each Licensee and each Authorized User then under contract for maintenance or technical support in writing of the intended discontinuance; and (ii) continue to offer Product or withdrawn support upon the Contract terms previously offered for the greater of: a) the best terms offered by Contractor to any other customer, or b) not less than twelve (12) months from the date of notice; and (iii) at Authorized User's option, provided that the Authorized User is under contract for maintenance on the date of notice, either: provide the Authorized User with a Product replacement or migration path with at least equivalent functionality at no additional charge to enable Authorized User to continue use and maintenance of the Product.

In the event that the Contractor is not the Product Manufacturer, Contractor shall be required to: (i) provide the notice required under the paragraph above, to the entities described within five (5) business days of Contractor receiving notice from the Product Manufacturer, and (ii) include in such notice the period of time from the date of notice that the Product Manufacturer will continue to provide Product or withdraw support.

The provisions of this subdivision (a) shall not apply or eliminate Contractor's obligations where withdrawn support is being provided by an independent Subcontractor. In the event that such Subcontractor

ceases to provide service, Contractor shall be responsible for subcontracting such service, subject to state approval, to an alternate Subcontractor.

b. **Product or Service Re-Bundling** In the event that Contractor is the Product manufacturer and publicly announces to all U.S. customers ("date of notice") that a Product or maintenance or technical support offering is being re-bundled in a different manner from the structure or licensing model of the prior U.S. commercial offering, Contractor shall be required to: (i) notify the State and each Authorized User in writing of the intended change; (ii) continue to provide Product or withdrawn support upon the same terms and conditions as previously offered on the then-current NYS Contract for the greater of: a) the best terms offered by Contractor to any other customer, or b) not less than twelve (12) months from the date of notice; and (iii) shall submit the proposed rebundling change to the Commissioner for approval prior to its becoming effective for the remainder of the Contract term. The provisions of this section do not apply if the Contractor is not the Product manufacturer.

85. NO HARDSTOP/PASSIVE LICENSE MONITORING Unless an Authorized User is otherwise specifically advised to the contrary in writing at the time of order and prior to purchase, Contractor hereby warrants and represents that the Product and all Upgrades do not and will not contain any computer code that would disable the Product or Upgrades or impair in any way its operation based on the elapsing of a period of time, exceeding an authorized number of copies, advancement to a particular date or other numeral, or other similar self-destruct mechanisms (sometimes referred to as "time bombs," "time locks," or "drop dead" devices) or that would permit Contractor to access the Product to cause such disablement or impairment (sometimes referred to as a "trap door" device). Contractor agrees that in the event of a breach or alleged breach of this provision that Authorized User shall not have an adequate remedy at law, including monetary damages, and that Authorized User shall consequently be entitled to seek a temporary restraining order, injunction, or other form of equitable relief against the continuance of such breach, in addition to any and all remedies to which Authorized User shall be entitled.

86. SOURCE CODE ESCROW FOR LICENSED PRODUCT If Source Code or Source Code escrow is offered by either Contractor or Product manufacturer or developer to any other commercial customers, Contractor shall either: (i) provide Licensee with the Source Code for the Product; or (ii) place the Source Code in a third party escrow arrangement with a designated escrow agent who shall be named and identified to the State, and who shall be directed to release the deposited Source Code in accordance with a standard escrow agreement acceptable to the State; or (iii) will certify to the State that the Product manufacturer/developer has named the State, acting by and through the Authorized User, and the Licensee, as a named beneficiary of an established escrow arrangement with its designated escrow agent who shall be named and identified to the State and Licensee, and who shall be directed to release the deposited Source Code in accordance with the terms of escrow. Source Code, as well as any corrections or enhancements to such source code, shall be updated for each new release of the Product in the same manner as provided above and such updating of escrow shall be certified to the State in writing. Contractor shall identify the escrow agent upon commencement of the Contract term and shall certify annually that the escrow remains in effect in compliance with the terms of this paragraph.

The State may release the Source Code to Licensees under this Contract who have licensed Product or obtained services, who may use such copy of the Source Code to maintain the Product.

FOR NEGOTIATED CONTRACTS THE FOLLOWING CLAUSES ARE RESERVED BECAUSE BIDDING DOES NOT APPLY:

Clauses: 7, 8, 9, 10, 11, 12, 13, 16, 15, 21, 25, 26, 28, 29, 30, 31, 32, 33, 36, 49, 50, 52, 54 and 37

INDEX

	Paragraph No.
A	
Additional Warranties	72
Advertising Results	20
Applicability	1
Assignment	56
Assignment of Claim	66
Audit of Licensed Product Usage	80
Authentication of Facsimile Bids	10
B	
Bid Contents	12
Bid Evaluation	29
Bid Opening	7
Bid Submission	8
C	
Changes to Product or Service Offerings	84
Clarification/Revisions	31
Confidential/Trade Secret Materials	14
Conflict of Terms	4
Conditional Bid	30
Contract Billings	62
Contract Creation/Execution	38
Contract Term - Renewal	71
Cooperation with Third Parties	70
D	
Default - Authorized User	63
Definitions	5
Disqualification for Past Performance	35
Drawings	25
E	
Emergency Contracts	43
Employees/Subcontractors/Agents	55
Equivalent or Identical Bids	33
Estimated/Specific Quantity Contracts	42
Ethics Compliance	3
Expenses Prior to Contract Execution	19
Extraneous Terms	13
F	
Facsimile Submissions	9
Freedom of Information Law	16
G	
Governing Law	2
I	
Indemnification	74
Indemnification Relating to Third Party Rights	75
Independent Contractor	68
Installation	52
Insurance	77
Interest on Late Payments	64
International Bidding	6
L	
Late Bids	11
Legal Compliance	73
Limitation of Liability	76

	Paragraph No.
M	
Modification of Contract Terms	40
N	
No Hardstop/Passive License Monitoring	85
O	
On-Site Storage	54
Ownership/Title to Project Deliverables	81
P	
Participation in Centralized Contracts	39
Performance and Responsibility Qualifications	34
Performance/Bid Bond	58
Prevailing Wage Rates Public Works & Building Services Contracts	17
Pricing	24
Procurement Card	27
Product Acceptance	79
Product Delivery	45
Product References	21
Product Substitution	50
Product Version	83
Products Manufactured in Public Institutions	23
Prompt Payment Discounts	32
Proof of License	82
Purchase Orders	44
Q	
Quantity Changes Prior to Award	36
R	
Rejected Product	51
Release of Bid Evaluation Materials	15
Re-Weighing Product	49
Remanufactured, Recycled, Recyclable or Recovered Materials	22
Remedies for Breach	65
Repaired or Replaced Product/Components	53
S	
Samples	28
Savings/Force Majeure	61
Scope Changes	41
Security	69
Site Inspection	26
Shipping/Receipt of Product	47
Software License Grant	78
Source Code Escrow for Licensed Product	86
Subcontractors and Suppliers	57
Suspension of Work	59
T	
Taxes	18
Termination	60
Timeframe for Offers	37
Title and Risk of Loss	48
Toxic Substances	67
W	
Weekend and Holiday Deliveries	46

Appendix C

Light Duty Vehicles Including Law Enforcement (Statewide) Documents:

Number 1, Awarded Items

Number 2, Price Pages

Number 3, Report of Contract Usage

Number 4, Contractor Information

Number 5, Contractor Insurance Requirements

Appendix C, Number 1, Awarded Items

Lot #, Item #	Item Description	Vehicle
Lot V, Item 7	Chevrolet Caprice (1EW19) 4dr Police Patrol Vehicle	Chevrolet Caprice (1EW19)

Appendix C, Number 2, Price Pages

Lot V: Item 7

Vehicle Description	Chevrolet Caprice (1EW19) 4dr Police Patrol Vehicle
Year / Make / Model	2014 Chevrolet Caprice (1EW19)
Contractor	Joe Basil Chevrolet Inc.
Unit Price	$36,088.64
Option Discount	15.00%
DOT Option Package Price	N/A
Pickup Credit (per vehicle)	$0.00

Vehicle Base Specifications	
Note: The actual vehicle awarded may exceed the minimum specifications stated below. The Authorized User may elect to add additional Options, delete Options, or substitute a vehicle feature that is an Option with another Option. See Contract Section III.6 Options.	
Equipment	As standard for 1EW19, unless specified below
Preferred Equipment Pkg.	Police (Option 1SB)
Engine	6.0L 8 cylinder SFI (Option L77)
Transmission	6-Speed Automatic (MX0)
	Limited Slip Differential (Option G80)
Wheels	18" Heavy-Duty Steel (RT3)
Tires	P235/50R18 AS BW (R5M)
	Full-Size Spare Wheel & Tire (Option SG8)
Seats	Front Bucket Seats w/Vinyl Rear Bench (Option HCQ)
Other Options	Monotone Paint Application (Paint)
	Police Package (Option 9C1)
	Radio: AM/FM Stereo w/CD Player & MP3 Playback (UFU)
	Head Curtain Side-Impact Air Bags (Option AYG)
	6 Cut Keys (Option AMF)
	Red & White Front Auxiliary Dome Lighting (Option 6C7)
	Inoperative Inside Rear Door Locks & Handles (Option 6N6)
	6N5 Inoperative Rear-Window Switches (Option 6N5)
	130mph Top Speed Limiter (Option SGT)
	Grille Lamps & Siren Speaker Wiring (Option 6J3)
	6J4 Horn & Siren Circuit Wiring (Option 6J4)
	DRL Compatible Headlamp & Taillamp Flasher System (Option 6J7)
	Outside Heated Power-Adjustable Mirrors (Option DR9)

Lot V: Item 7 Cont.

Interior Color	Jet Black (Option 4AA)
Exterior Color	Phantom Black Metallic (Option GIE)
Emissions	CT/DE/ME/MD/MA/NJ/NY/OR/PA/RI/VT/WA Emissions Req (Option NE1)
Special Equipment	The following additional Special Equipment Option Package will be provided by KERR INDUSTRIES and factory installed on the vehicle prior to delivery:
	KERR OPTION PACKAGE: KT-NYSP-2014-9C1
	Bidding dealers can contact Mr. Brad Baker: 1-800-585-1774, Kerr Industries for Special Equipment Option Package pricing.

Appendix C, Number 3, Report of Contract Usage

DO NOT ADD, REMOVE OR REARRANGE ANY COLUMNS OR ROWS.

Please fill in the required supplier information below.

Required Information	Answer
Supplier Name	
Supplier Award areas (lots and items)	
Address Line 1	
Address Line 2	
City	
State	
Zip Code	
Contact Name	
Email Address	
Phone Number	
Contract Number	

The chart below provided definitions for the columns listed in the data collection tabs. Please use this as a reference when populating these tabs.

Column	Definition	Comment/Example
Invoice #	Invoice number	
Invoice Date	Date of invoice	
PO #	Purchase order number	
Contract #	New York State contract number	
Agency/State Entity/Municipality	New York State agency/entity or municipality	Ex: Dept of Transpiration, Dept of Correctional Services, Rockland County, SUNY Buffalo
Region/Facility/Location Name	Region, facility, or location associated with the agency or entity	Ex: DOT District 2, Adirondack Correctional Facility
VIN #	Vehicle Identification Number of each vehicle sold	
Manufacturer	Name of manufacturer of vehicle	Ex. Ford, GM
Make	Vehicle make	Ex. Chevrolet, GMC, Buick, Ford, Mercury, etc.
Model	Vehicle model	Ex. Tahoe, Fusion, Impala, etc.
Model Level	Model level of vehicle purchased	Ex. Cargo, Passenger, XL, Limited
Model Year	Model year of vehicle purchased	Ex. 2010
Color	Vehicle color	
Vehicle Type	Type of vehicle purchased	Ex. Compact, Mid-Size, RWD SUV, etc.
Base Vehicle Cost	Contract price for base vehicle excluding any options	
Options	List any options purchased for the vehicle, please list all options in subsequent rows	
Options Discount	Discount given on options purchased	
Net Options Cost	Total net cost for options purchased	
Non-OEM Equipment	List any non-OEM equipment installed	
Non-OEM Equipment Cost	Total cost for any non-OEM equipment purchased	
Unit Price	Price for entire vehicle including options	
Delivery Cost (Per Unit)	Delivery cost per unit	
Extended Cost	Total Cost	*Base Vehicle Cost + Net Options Cost + Non-OEM Equipment Cost + Delivery Cost*
County Ship To	County to which vehicle was delivered	
Ship To Street Address	Ship To Street Address	
Ship To Zip Code	Ship To Zip Code	

Spend Report Spreadsheet - Vehicle Data

DO NOT ADD, REMOVE OR REARRAGE ANY COLUMNS OR ROWS.

Invoice #	Invoice Date	PO #	Contract #	Contract Item Number	State Agency/Entity	Region/Facility/Location Name	VIN #	Manufacturer	Make	Model
1234	12/1/2012	7891011	PC12345	1	Office of General Services	Albany	11223344556677889	Ford	Ford	Fusion

Model #	Model Year	Factory Invoice Price	Dealer Holdback Amount	Manufacturer's Bid Assistance	Vehicle Price	Options Cost	Extended Cost	Ship To Street Address	Ship To Region	Ship To Zip Code
	2013	$ 25,000.00	$ 600.00	$ 2,000.00	$ 22,400.00	$ 15,000.00	$ 37,400.00	1234 Park Ave	1	12242
							$ -			
							$ -			
							$ -			
							$ -			
							$ -			
							$ -			
							$ -			
							$ -			
							$ -			
							$ -			
							$ -			
							$ -			
							$ -			
							$ -			
							$ -			

Spend Report Spreadsheet - Option Data

DO NOT ADD, REMOVE OR REARRAGE ANY COLUMNS OR ROWS.

Contract Number	Contract Item Number	Total Items Purchased	Manufacturer	Make	Model	Model #	VIN#	Model Year	Option Code
PC12345	1	1	Ford	Ford	Fusion		11223344556677889	2013	A51

Option Description	Quantity of Options Purchased	Option Unit Price	Total Option Price
Tinted Windows	1	$ 40.00	$ 40.00
			$ -
			$ -
			$ -
			$ -
			$ -
			$ -
			$ -
			$ -
			$ -
			$ -
			$ -
			$ -
			$ -
			$ -
			$ -

Appendix D, Number 4, Contractor Information

Non-OEM Providers

Kerr Industries
Whelen Engineering
TruckVault
Unicell
VPS Marketing Graphics Group

Payment/Ordering Information

Does Contractor have a contract with the General Services Administration (GSA) or Veteran's Affairs (VA) for products offered?	No
If Yes, will Contractor offer NYS pricing equal to or better than GSA or VA pricing?	N/A
Does Contractor offer Prompt Payment Discounts?	No
Does Contractor offer Electronic Access Ordering (EDI)?	No

Contact Information for Ordering, Expedited Ordering, Contract Administration and Emergencies Occurring after Business Hours

Company Name:	Joe Basil Chevrolet Inc.
Contact Name:	Michael Hopkins
Phone Number:	(716) 206-1746
Fax Number:	(716) 685-1746
Address:	5111 Transit Road
City, State, Zip:	Depew, NY 14043
E-Mail:	michaelh@joebasilchevrolet.com

Appendix D, Number 5, Contractor Insurance Requirements

The Contractor shall procure at its sole cost and expense, and shall maintain in force at all times during the term of this Contract, policies of insurance as herein below set forth, written by companies licensed or authorized by the New York State Department of Financial Services to issue insurance in the State of New York ("Admitted Carriers") with an A.M. Best Company rating of "A-" Class "VII" or better. If during the term of the policy, a carrier's rating falls below "A-" Class "VII", the insurance must be replaced no later than the renewal date of the policy with an insurer rated at least "A-" Class "VII" in the most recently published Best's Insurance Report.

The Contractor shall deliver to OGS evidence of such policies in a form acceptable to OGS. These policies must be written in accordance with the requirements of the paragraphs below, as applicable. Acceptance and/or approval by OGS does not and shall not be construed to relieve Contractor of any obligations, responsibilities or liabilities under the Contract.

General Conditions

A. Conditions Applicable to Insurance. All policies of insurance required by this Contract must meet the following requirements:

1. Coverage Types and Policy Limits. The types of coverage and policy limits required from the Contractor are specified in Paragraph B *Insurance Requirements* below.

2. Policy Forms. Except as may be otherwise specifically provided herein or agreed to in writing by OGS, policies must be written on an occurrence basis.

3. Certificates of Insurance/Notices. Contractor shall provide a Certificate or Certificates of Insurance, in a form satisfactory to OGS, upon tentative award and within three (3) business days of request. Certificates shall reference the Contract Number. **ALL OF THE ABOVE REFERENCED FORMS, EXCEPT CE-200, SI-12 & DB-155 MUST NAME**: The Office of General Services, Procurement Services Group, 38th floor, Corning Tower, Albany NY 12242 as the Entity Requesting Proof of Coverage (Entity being listed as the Certificate Holder). Certificates shall be submitted to the Office of General Services, Procurement Services Group, Corning Tower- 38th Floor, Empire State Plaza, Albany, NY 12242.

Unless otherwise agreed, policies shall be written so as to include a provision that the policy will not be canceled, materially changed, or not renewed without at least thirty (30) days prior written notice except for non-payment as required by law to OGS. The Contractor shall not take any action, or omit to take any action that would suspend or invalidate any of the required coverages during the period of time such coverages are required to be in effect. Not less than thirty (30) days prior to the expiration date or renewal date, the Contractor shall supply OGS updated replacement Certificates of Insurance, and amendatory endorsements.

Certificates of Insurance shall:

a. Be in the form approved by OGS.
b. Disclose any deductible, self-insured retention, aggregate limit or any exclusion to the policy that materially changes the coverage required by the contract.
c. Specify the Additional Insured and Named Insured as required herein.
d. Refer to this Contract by number and any other attachments on the face of the certificate, and
e. Be signed by an authorized representative of the insurance carrier or producer.

Only original documents (Certificates of Insurance and other attachments) will be accepted.

4. ***Primary Coverage.*** All insurance policies shall provide that the required coverage shall apply on a primary and not on an excess or contributing basis as to any other insurance that may be available to OGS or any Authorized User for any claim arising from the Contractor 's work under this Contract, or as a result of the Contractor's activities. Any other insurance maintained by OGS or any Authorized User shall be excess of and shall not contribute with the Contractor's insurance regardless of the "other insurance" clause contained in OGS or the Authorized User's own policy of insurance.

5. ***Policy Renewal/Expiration.*** At least thirty (30) days prior to the expiration of any policy required by this Contract, evidence of renewal or replacement policies of insurance with terms no less favorable to OGS than the expiring policies shall be delivered to OGS in the manner required for service of notice in Paragraph A.3. *Certificates of Insurance/Notices* above. If, at any time during the term of this Contract, the coverage provisions and limits of the policies required herein do not meet the provisions and limits set forth in the Contract or proof thereof is not provided to OGS, the Contractor shall immediately cease work. The Contractor shall not resume work until authorized to do so by OGS. Any delay, time lost, or additional cost incurred as a result of the Contractor not having insurance required by the Contract or not providing proof of same in a form acceptable to OGS, shall not give rise to a delay claim or any other claim against OGS. Should the Contractor fail to provide or maintain any insurance required by this Contract, or proof thereof is not provided, OGS or Authorized Users may withhold further contract payments, treat such failure as a breach or default of the contract.

6. ***Self-Insured Retention/Deductibles.*** Certificates of Insurance must indicate the applicable deductible/self insured retention on each policy. Deductibles or self-insured retentions above $100,000 are subject to approval from OGS. The Contractor shall be solely responsible for all claim expenses and loss payments within the deductible or self-insured retention.

7. ***Subcontractors.*** Should the Contractor engage a Subcontractor, the Contractor shall require all Subcontractors, prior to commencement of an agreement between Contractor and the Subcontractor, to secure and keep in force during the term of this contract the insurance requirements of this document on the Subcontractor, as applicable. Required insurance limits should be determined commensurate with the work of the Subcontractor. Proof thereof shall be supplied to OGS.

All insurance required by the Contract shall name The People of the State of New York, its officers, agents, and employees as additional insured hereunder General Liability Additional Insured Endorsement shall be on Insurance Service Office's (ISO) form number **CG 20 26 11 85** or the equivalent. Additional Insured Endorsements shall be provided upon tenantive award and within three (3) days of request. The additional insured requirement does not apply to Workers Compensation, Disability or Professional Liability coverage.

B. Insurance Requirements: The Contractor, throughout the term of this Contract, or as otherwise required by this Contract, shall obtain and maintain in full force and effect, the following insurance with limits not less than those described below and as required by the terms of this Contract, or as required by law, whichever is greater (limits may be provided through a combination of primary and umbrella/excess policies):

a) Commercial General Liability Insurance with a limit of not less than **$2,000,000.00** each occurrence. Such liability shall be written on the ISO occurrence form **CG 00 01 01 96**, or a substitute form providing equivalent coverages and shall cover liability arising from premises operations, independent contractors, products-completed operations, broad form property damage, personal & advertising injury, cross liability coverage, liability assumed in a contract (including the tort liability of another assumed in a contract) and explosion, collapse & underground coverage.

1. For construction contracts only, if such insurance contains an aggregate limit, it shall apply separately on a per job basis. Policy shall include bodily injury, property damage and broad form contractual liability coverage.
2. General Aggregate $2,000,000
3. Products – Completed Operations Aggregate $1,000,000
4. Personal and Advertising Injury $1,000,000
5. Each Occurrence $2,000,000

Coverage shall include, but not be limited to, the following:

- premises liability,
- independent contractors,
- blanket contractual liability, including tort liability of another assumed in a contract,
- defense and/or indemnification obligations, including obligations assumed under this contract,
- cross liability for additional insureds
- products/completed operations for a term of no less than 3 years, commencing upon acceptance of the work, as required by the contract
- explosion, collapse, and underground hazards,
- contractor means and methods.

The following ISO forms must be endorsed to the policy:

a. CG 00 01 01 96 or an equivalent – Commercial General Liability Coverage Form

b. CG 20 10 11 85 or an equivalent – Additional Insured-Owner, Lessees or Contractors (Form B)

c. Waiver of Subrogation Endorsement.

Limits may be provided through a combination of primary and umbrella/excess liability policies. The CGL aggregate shall be endorsed to apply on a per project basis for construction contracts.

Policies shall be endorsed to name The People of the State of New York and the New York State Office of General Services as Additional Insureds, and such coverage shall be extended to afford Additional Insured status to those entities during the Products/Completed Operations term.

The CGL policy, and any umbrella/excess policies used to meet the " Each Occurrence" limits specified above, must be endorsed to be primary with respects to the coverage afforded the Additional Insureds, and such polic(ies) shall be primary to, and non-contributing with, any other insurance maintained by OGS. Any other insurance maintained by OGS shall be excess of and shall not contribute with the Contractor's or Subcontractor's insurance, regardless of the "Other Insurance" clause contained in either party's policy of insurance.

b) Comprehensive Business Automobile Liability Insurance with a limit of not less than **$2,000,000.00** each accident. Such insurance shall cover liability arising out of any automobile including owned, leased, hired and non owned automobiles.

Waiver of Subrogation. Contractor shall cause to be included in each of its policies insuring against loss, damage or destruction by fire or other insured casualty a waiver of the insurer's right of subrogation against OGS, or, if such waiver is unobtainable (i) an express agreement that such policy shall not be invalidated if Contractor waives or has waived before the casualty, the right of recovery against OGS or (ii) any other form of permission for the release of OGS. A Waiver of Subrogation Endorsement shall be provided upon tentantive award and within three (3) days of request.

C. Workers' Compensation Insurance and Disability Benefits Requirements

Workers' Compensation Law (WCL) §57 & §220 requires the heads of all municipal and state entities to ensure that businesses applying for permits, licenses or contracts document it has appropriate workers' compensation and disability benefits insurance coverage. These requirements apply to both original contracts and renewals, whether the governmental agency is having the work done or is simply issuing the permit, license or contract. Failure to provide proof of such coverage or a legal exemption will result in a rejection of your bid or renewal.

1. Proof of Compliance with Workers' Compensation Coverage Requirements:

An ACORD form is NOT acceptable proof of workers' compensation coverage. In order to provide proof of compliance with the requirements of the Workers' Compensation Law pertaining to workers' compensation coverage, a contractor shall:

A) Be legally exempt from obtaining Workers' Compensation insurance coverage; or
B) Obtain such coverage from an insurance carrier; or
C) Be a Workers' Compensation Board-approved self-insured employer or participate in an authorized self-insurance plan.

A Contractor seeking to enter into a contract with the State of New York shall provide one of the following forms to the Office of General Services at the time of bid submission:

A) Form CE-200, Certificate of Attestation for New York Entities With No Employees and Certain Out of State Entities, That New York State Workers' Compensation and/or Disability Benefits Insurance Coverage is Not Required, which is available on the Workers' Compensation Board's website (www.wcb.state.ny.us); (Reference applicable RFP and Group #s on the form.)
B) Certificate of Workers' Compensation Insurance:
   1) Form C-105.2 (9/07) if coverage is provided by the contractor's insurance carrier, contractor must request its carrier to send this form to the New York State Office of General Services, or
   2) Form U-26.3 if coverage is provided by the State Insurance Fund, contractor must request that the State Insurance Fund send this form to the New York State Office of General Services.
C) Form SI-12, Certificate of Workers' Compensation Self-Insurance available from the New York State Workers' Compensation Board's Self-Insurance Office.
D) Form GSI-105.2, Certificate of Participation in Workers' Compensation Group Self-Insurance available from the contractor's Group Self-Insurance Administrator.

2. Proof of Compliance with Disability Benefits Coverage Requirements:

In order to provide proof of compliance with the requirements of the Workers' Compensation Law pertaining to disability benefits, a contractor shall:

A) Be legally exempt from obtaining disability benefits coverage; or
B) Obtain such coverage from an insurance carrier; or
C) Be a Board-approved self-insured employer.

A Contractor seeking to enter into a contract with the State of New York shall provide one of the following forms to the Office of General Services at the time of bid submission:

A) Form CE-200, Certificate of Attestation for New York Entities With No Employees and Certain Out of State Entities, That New York State Workers' Compensation and/or Disability Benefits Insurance Coverage is Not Required, which is available on the Workers' Compensation Board's website (www.wcb.state.ny.us); (Reference applicable RFP and Group #s on the form.)
B) Form DB-120.1, Certificate of Disability Benefits Insurance. Contractor must request its business insurance carrier to send this form to the New York State Office of General Services; or
C) Form DB-155, Certificate of Disability Benefits Self-Insurance. The Contractor must call the Board's Self-Insurance Office at 518-402-0247 to obtain this form.

Appendix D

Minority and Women-Owned Business Enterprises Equal Employment Opportunity Policy Statement

CONTRACTOR'S EXECUTIVE LAW, ARTICLE 15-A (M/WBE) REQUIREMENTS

MINORITY AND WOMEN-OWNED BUSINESS ENTERPRISES EQUAL EMPLOYMENT OPPORTUNITY POLICY STATEMENT

I, MICHAEL HOPKINS, the SPECIALTY VEHICLE SALES (title) of JOE BASIL CHEVROLET, INC (Contractor) agree that JOE BASIL SHEVROLET, INC (Contractor) has adopted the following policies with respect to Contract Number PC66386

M/WBE

Contractor will make good faith efforts to achieve the M/WBE contract participations goals set by OGS for that area in which the State-funded project is located, by taking the following steps:

(1) Actively and affirmatively soliciting bids for subcontracts from qualified State certified MBEs or WBEs, including solicitations to MWBE contractor associations.
(2) Request a list of State-certified MWBEs from OGS and solicit bids from them directly.
(3) Ensure that plans, specifications, request for proposals and other documents used to secure bids will be made available in sufficient time for review by prospective M/WBEs.
(4) Where feasible, divide the work into smaller portions to enhanced participations by MWBEs and encourage the formation of joint venture and other partnerships among MWBE contractors to enhance their participation.
(5) Document and maintain records of bid solicitation, including those to MWBEs and the results thereof.
(6) Ensure that progress payments to M/WBEs are made on a timely basis so that undue financial hardship is avoided and provide appropriate support, including waiving bonding and other credit requirements where permissible, to encourage MWBE participation.

Agreed to this 9TH day of DECEMBER, 2013

By

Print: MICHAEL HOPKINS

Title: SPECIALTY VEHICLE SALES

EEO

(a) Contractor will not discriminate against any employee or applicant for employment because of race, creed, color, national origin, sex, age, disability or marital status, will undertake or continue existing programs of affirmative action to ensure that minority group members are afforded equal employment opportunities without discrimination, and shall make and document its conscientious and active efforts to employ and utilize minority group members and women in its work force on state contracts.
(b) Contractor shall state in all solicitation or advertisements for employees that in the performance of the State contract all qualified applicants will be afforded equal employment opportunities without discrimination because of race, creed, color, national origin, sex disability or marital status.
(c) At the request of the contracting agency, Contractor shall request each employment agency, labor union, or authorized representative will not discriminate on the basis of race, creed, color, national origin, sex, age, disability or marital status and that such union or representative will affirmatively cooperate in the implementation of Contractor's obligations herein.
(d) Contractor shall comply with the provisions of the Human Rights Law, all other State and Federal statutory and constitutional non-discrimination provisions. Contractor and subcontractors shall not discriminate against any employee or applicant for employment because of race, creed (religion), color, sex, national origin, sexual orientation, military status, age, disability, predisposing genetic characteristic, marital status or domestic violence victim status, and shall also follow the requirements of the Human Rights Law with regard to non-discrimination on the basis of prior criminal conviction and prior arrest.
(e) Contractor will include the provisions of sections (a) through (d) of this agreement in every subcontract in such a manner that the requirements of the subdivisions will be binding upon each subcontractor as to work in connection with the State contract.

AGREEMENT FOR LIGHT DUTY VEHICLES
including
LAW ENFORCEMENT
(Statewide)

BETWEEN

THE NEW YORK STATE OFFICE OF GENERAL SERVICES

AND

JOE BASIL CHEVROLET INC.

CONTRACT NUMBER

PC66386

NYS Office of General Services
Serving New York

THIS AGREEMENT (hereinafter the "Contract" or the "Agreement") is made this 9th day of January, 2014, by and between the People of the State of New York, acting by and through the Commissioner of the New York State Office of General Services ("OGS") whose office is on the 41st Floor, Tower Building, Governor Nelson A. Rockefeller Empire State Plaza, Albany, New York 12242 (hereinafter "OGS" or "State"), and Howell & Pierson Inc. DBA Main Motorcar ("Main Motorcar" or "Contractor") with offices at 224 W. Main Street, Johnstown, NY. OGS and the Contractor are collectively referred to herein as "the Parties."

WITNESSETH:

WHEREAS, OGS issued a competitive solicitation, referenced as Invitation for Bids (IFB) #22737, for Light Duty Vehicles Including Law Enforcement, which was advertised in the August 14, 2013 edition of the New York State Contract Reporter as required by the New York State Economic Development Law.

WHEREAS, the IFB was for fifty-nine (59) vehicles (Items), and in accordance with State Finance Law §163(4)(b)(ii)(C) a decision was made to divide the vehicles divided into five (5) separate Lots

WHERAS, the IFB provided that the contracts will be awarded on a single Lot basis for Lot I, and on an individual item basis for Lots II, III, IV and V.

WHEREAS, the IFB was amended on August 29, 2013 to move one Item from Lot I to Lot II, and to add two (2) Items to Lot IV, for a total of sixty-one (61) vehicles (Items).

WHEREAS, OGS conducted a competitive process to identify bidders that provided the lowest price on Lot I and on each individual Item in Lots II, III, IV and V.

WHEREAS, the State has determined the Contractor submitted a responsive proposal, and had the lowest price for the Items identified in the Contract. The Contractor is willing to provide the vehicles set forth in the Contract.

NOW THEREFORE, in consideration of the terms hereinafter mentioned and also the mutual covenants and obligations moving to each Party hereto from the other, the Parties hereby agree as follows:

TABLE OF CONTENTS

SECTION I. SCOPE AND GENERAL INFORMATION 5

I.1 SCOPE 5

I.2 DEFINITIONS 5

SECTION II. GENERAL TERMS AND CONDITIONS 7

II.1 APPENDIX A 7

II.2 APPENDIX B 7

II.3 APPENDIX C 7

II.3.1 APPENDIX D 7

II.4 APPENDIX B MODIFICATIONS 7

II.5 MERCURY ADDED CONSUMER PRODUCTS 9

II.6 DIESEL EMISSION REDUCTION ACT OF 2006 (NEW REQUIREMENT OF LAW) 9

II.7 VENDOR RESPONSIBILITY 9

II.8 USE OF RECYCLED OR REMANUFACTURED MATERIALS 10

II.9 PURCHASE ORDERS AND INVOICING 10

II.10 CONTRACT PAYMENTS 11

II.11 NOTE TO AUTHORIZED USERS 11

II.12 "OGS OR LESS" GUIDELINES APPLY TO THIS CONTRACT 11

II.13 NON-STATE AGENCIES PARTICIPATION IN CENTRALIZED CONTRACTS 12

II.14 EXTENSION OF USE 12

II.15 EXTENSION OF USE COMMITMENT 12

II.16 CONTRACT PERIOD AND RENEWALS 12

II.17 POOR PERFORMANCE 13

II.18 BASIC WARRANTY 13

II.19 ADVERTISING 13

II.20 OVERLAPPING CONTRACT ITEMS 14

II.21 IRAN DIVESTMENT ACT 14

II.22 PARTICIPATION BY MINORITY GROUP MEMBERS AND WOMEN WITH RESPECT TO STATE CONTRACTS: REQUIREMENTS AND PROCEDURES 14

II.23 GENERAL REQUIREMENTS 16

II.24 REPORT OF CONTRACT USAGE 16

II.25 CONTRACTOR INSURANCE REQUIREMENTS 16

SECTION III. SPECIAL TERMS AND CONDITIONS 17

III.1 EQUIPMENT TO BE FURNISHED WITH AN ITEM 17

III.2 MOTOR VEHICLE REGULATIONS 17

III.3 EMISSIONS CONTROLS 17

III.4 DMV INSPECTION 17

III.5 PRICE SHEETS AND CATALOGS 17

III.6 OPTIONS 18

III.7 REPLACEMENT VEHICLES 20

III.8 PRICE 21

III.9 DELIVERY 23
III.10 SERVICE 24
III.11 PILOT MODEL FOR LOT V 25
III.12 AVAILABILITY 25
III.13 RECALLS 25
III.14 FORD FIN CODE NUMBER 25
III.15 PERFORMANCE AND BID BONDS 26
III.16 DISPUTE RESOLUTION POLICY 26
III.17 CAPTIONS 26
III.18 SEVERABILITY 26
III.19 COUNTERPARTS 26
III.20 ENTIRE AGREEMENT 26

APPENDICES

APPENDIX A – *Standard Clauses for New York State Contracts (December 2012)*

APPENDIX B – *General Specifications (July 2006)*

APPENDIX C – *Light Duty Vehicles Including Law Enforcement (Statewide) Documents:*

Number 1, Awarded Items

Number 2, Price Pages

Number 3, Report of Contract Usage

Number 4, Contractor Information

Number 5, Contractor Insurance Requirements

APPENDIX D – *Minority and Women-Owned Business Enterprises and Equal Employment Opportunity Policy Statement*

SECTION I. SCOPE AND GENERAL INFORMATION

I.1 SCOPE

This Contract is for the purchase of 2014 or current model year vehicles and related options, as specified herein, to be used by State agencies and others authorized by New York State Law.

Contractor has been awarded the Items set forth in Appendix C, Light Duty Vehicles Including Law Enforcement (Statewide) Documents, Number 1, Awarded Items.

Appendix C, Light Duty Vehicles Including Law Enforcement (Statewide) Documents, Number 2, Price Pages, sets forth the prices for the vehicles and the discount from MSRP for Options under this Contract.

The vehicles shall include all standard equipment normally sold and marketed to the retail public.

The State may permit the substitution of a new replacement model or a new replacement product line if the model series or the product line originally awarded is discontinued, replaced, or made unavailable by the Original Equipment Manufacturer (OEM). The Unit Price for such replacement shall be determined by taking the Factory Invoice Price (including all outlined specifications for the vehicle), applying the Manufacturer's Bid Assistance for the vehicle, and applying the dealer Discount percentage originally bid for the vehicle being replaced.

References to the State and its Agencies as Authorized Users under this solicitation and the ensuing contract(s) encompass and include all such entities within the definition of "Authorized User" set forth in State Finance Law §163(1)(k).

The Contractor(s) must furnish all quantities or dollar values actually ordered.

I.2 DEFINITIONS

Terms used in the Contract that have a capitalized first letter shall be defined in accordance with Appendix B, §5 *Definitions*, which is hereby incorporated by reference. In addition, the following definitions shall apply:

"Authorized User(s)" as defined in State Finance Law §163(1)(k).

"**Contract"** as defined in Appendix B.

"Contractor" shall refer to a responsive and responsible Bidder who has attained the lowest Total for Item score for a particular Item or Items, or the lowest Grand Total of Bid score, as applicable, and is working under an executed contract with New York State. Contractor is a general term.

"Current Model Year" shall mean either 2014, or if final published 2014 MY pricing is not available from the OEM, the Current Model Year shall be the final published vehicle pricing for the MY currently available from the OEM (e.g. 2013 or 2015).

"Dealer Discount" shall refer to the percentage credit to Authorized User for Contractor's typical overhead expenses in non-fleet purchases (such as advertising/marketing, special planning, sales incentive programs, etc.)

"Dealer Invoice" shall refer to the document which lists, at a minimum,

(1) the make and model of the vehicle bid;
(2) the MSRP of the vehicle with included Options; and
(3) the Factory Invoice Price (also known as Factory Wholesale Price or Dealer Invoice Price) for the vehicle, inclusive of destination charges, standard equipment, Options and upfits, if applicable.

"Factory Invoice Price" shall refer to the price the OEM charges a Contractor for an Option or a vehicle inclusive of all standard equipment, Options, and destination charges. Also known as "Factory Wholesale Price" or "Dealer Invoice Price"

"Final Order Due Date" shall mean the last calendar date that an Authorized User may issue a Purchase Order to the Contractor for a vehicle, in order to have the vehicle built before MY Build-Out Date.

"Item" shall refer to a vehicle and its corresponding Options as set forth in Appendix C, Light Duty Vehicles Including Law Enforcement (Statewide) Documents, Number 1, Price Pages.

"Lot" shall refer to the grouping of Items as referenced in Appendix C, Light Duty Vehicles Including Law Enforcement (Statewide) Documents, Number 1, Price Pages.

"M/WBE" shall refer to a business certified with Empire State Development (ESD) as a Minority and/or Women-owned Business Enterprise

"Manufacturer's Bid Assistance" shall refer to the manufacturer's credit to the State for fleet purchases and is applied to the Factory Invoice Price

"MSRP" shall refer to the Manufacturer's Suggested Retail Price

"May" denotes the permissive in a contract clause or specification. "May" does not mean "required." Also see "Shall" and "Must."

"Model Year (MY)" shall mean the year used to designate a discrete vehicle model, irrespective of the calendar year in which the vehicle was actually produced, provided that the production period does not exceed 24 months.

"MY Build-Out Date" shall mean the last date of manufacture for the Model Year of a vehicle.

"Must" denotes the imperative in a contract clause or specification. "Must" is synonymous with "required." Also see "Shall" and "May."

"Net Options Cost" shall refer to the Total Estimated Options less Options percentage discount.

"New York State Procurement (NYSPro)"(formerly known as Procurement Services Group (PSG)" shall mean a division of the New York State Office of General Services which is authorized by law to issue centralized, statewide contracts for use by New York agencies, political subdivisions, schools, libraries and others authorized by law to participate in such contracts. The terms NYSPro and PSG shall be used interchangeably for purposes of this solicitation.

"NYS Vendor ID" shall refer to the ten-character identifier issued by New York State when a vendor is registered on the Vendor File.

"OEM" shall refer to the Original Equipment Manufacturer.

"OEM Vehicle Specifications" shall refer to the document(s) issued by the vehicle manufacturer which lists, among other things,

(1) all standard equipment for the vehicle;

(2) all Options available for the vehicle, including the code number for each Option;

(3) the MSRP for the vehicle and available Options; and

(4) the Factory Invoice Price for the vehicle and available Options.

"Options" shall refer to an accessory, equipment, or feature that can be added to, or deleted from, a vehicle.

"Pick up Credit" shall refer to the amount of credit an Authorized User would receive from contractor should an Authorized User choose to pick-up vehicle(s) ordered from either the contractor or contractor's courtesy dealer in lieu of having vehicle delivered. Such credit must appear on Authorized Users Invoice.

"Shall" denotes the imperative in a contract clause or specification. "Shall" is synonymous with "required." Also see "Must" and "May."

"Unit Price" shall refer to the Factory Invoice Price minus the Manufacturer's Bid Assistance and minus the Dealer Discount.

SECTION II. GENERAL TERMS AND CONDITIONS

II.1 APPENDIX A

Appendix A, *Standard Clauses For New York State Contracts*, dated December 2012, attached hereto, is hereby expressly made a part of this Contract as fully as if set forth at length herein.

II.2 APPENDIX B

Appendix B, *Office of General Services General Specifications*, dated July 2006, attached hereto, is hereby expressly made a part of this Contract as fully as if set forth at length herein and shall govern any situations not covered by this Bid Document or Appendix A.

II.3 APPENDIX C

Appendix C – *Light Duty Vehicles Including Law Enforcement (Statewide) Documents*, comprised of the documents below, is hereby expressly made part of this Contract as fully as if set forth at length herein.

Number 1, Awarded Items

Number 2, Price Pages

Number 3, Report of Contract Usage

Number 4, Contractor Information

Number 5, Contractor Insurance Requirements

II.3.1 APPENDIX D

Appendix D – *Minority and Women-Owned Business Enterprises and Equal Employment Opportunity Policy Statement*, is hereby expressly made part of this Contract as fully as if set for the at length herein.

II.4 APPENDIX B MODIFICATIONS

The following Appendix B clauses are hereby modified for the purposes of this Contract:

A. Section 4, *Conflict of Terms*, is deleted and replaced with the following language:

4. <u>CONFLICT OF TERMS AND CONDITIONS</u> Conflicts among the documents shall be resolved in the following order of precedence:

a) Appendix A, Standard Clauses for New York State Contracts;
b) This Agreement, exclusive of all other Appendices;
c) Appendix B, General Specifications; and
d) Appendix C, Light Duty Vehicles Including Law Enforcement (Statewide) Documents:
    1. Number 1, Awarded Items
    2. Number 2, Price Pages
    3. Number 3, Report of Contract Usage
    4. Number 4, Contractor Information
    5. Number 5, Contractor Insurance Requirements

B. Section 5, *Definitions*, the definition of “Authorized User” is deleted and replaced with the following language:

“Authorized User” shall have the same meaning as that term is defined in State Finance Law Section 163(1)(k).

C. Section 33, *Equivalent or Identical Bids*, is deleted and replaced with the following language:

33. <u>EQUIVALENT OR IDENTICAL BIDS</u> In the event two offers are found to be substantially equivalent, the highest discount from MSRP Options shall be the basis for determining the award recipient. If two or more Bidders submit substantially equivalent Bids as to pricing or other factors, the decision of the Commissioner to award a Contract to one or more of such Bidders shall be final.

D. Section 45, *Product Delivery*, is deleted and replaced in its entirety by Section III.9 of this Contract, *Delivery*.

E. Section 62, *Contract Billings*, is deleted and replaced with the following:

62. <u>CONTRACT BILLINGS AND PAYMENTS</u>:

a) Billings. Contractor and the dealers/distributors/resellers designated by the Contractor, if any, shall provide complete and accurate billing invoices to each Authorized User in order to receive payment. Billing invoices submitted to an Authorized User must contain all information required by the Contract and the State Comptroller or other appropriate fiscal officer. Submission of an invoice and payment thereof shall not preclude the Commissioner from requesting reimbursement or demanding a price adjustment in any case where the Product delivered is found to deviate from the terms and conditions of the Contract or where the billing was inaccurate.

Contractor shall provide, upon request of the Commissioner, any and all information necessary to verify the accuracy of the billings. Such information shall be provided in the format requested by the Commissioner and in a media commercially available from the Contractor. The Commissioner may direct the Contractor to provide the information to the State Comptroller or to any Authorized User of the Contract.

b) Payment of Contract purchases made by an Authorized User when the State Comptroller is responsible for issuing such payment. The Authorized User and Contractor agree that payments for invoices submitted by the Contractor shall only be rendered electronically unless payment by paper check is expressly authorized by the Commissioner, in the Commissioner's sole discretion, due to extenuating circumstances. Such electronic payments shall be made in accordance with ordinary State procedures and practices. The Contractor shall comply with the State Comptroller's procedures to authorize electronic payments. Authorization forms are available at the State Comptroller website at http://www.osc.state.ny.us/epay/index.htm or by e-mail at epayments@osc.state.ny.us. Contractor acknowledges that it will not receive payment on any invoices submitted under this Contract that are payable by the State Comptroller if it does not comply with the State Comptroller's electronic payment procedures, except where the Commissioner has expressly authorized payment by paper check as set forth above. Inquiries relating to OSC's Electronic Payments program should be directed to:

NYS Office of the State Comptroller
Vendor Management Unit
110 State Street Mail Drop 10-4
Albany, NY 12236
Telephone: (855) 233-8363
E-Mail: helpdesk@sfs.ny.gov

c) Payment of Contract purchases made by an Authorized User when the State Comptroller is not responsible for issuing such payment. The Authorized User and Contractor agree that payments for such Contract purchases shall be billed directly by Contractor on invoices/vouchers, together with complete and accurate supporting documentation as required by the Authorized User. Such payments shall be as mandated by the appropriate governing law from the receipt of a proper invoice. Such Authorized User and Contractor are strongly encouraged to establish electronic payments.

II.5 MERCURY ADDED CONSUMER PRODUCTS

Effective January 1, 2005, Article 27, Title 21 of the Environmental Conservation Law bans the sale or distribution free of charge of fever thermometers containing mercury except by prescription written by a physician and bans the sale or distribution free of charge of elemental mercury other than for medical pre-encapsulated dental amalgam, research, or manufacturing purposes due to the hazardous waste concerns of mercury. The law further states that effective July 12, 2005, manufacturers are required to label mercury-added consumer products that are sold or offered for sale in New York State by a distributor or retailer. The label is intended to inform consumers of the presence of mercury in such products and of the proper disposal or recycling of mercury-added consumer products. Contractor is encouraged to contact the Department of Environmental Conservation, Bureau of Solid Waste, Reduction & Recycling at (518) 402-8705 or the Bureau of Hazardous Waste Regulation at 1-800-462-6553 for questions relating to the law. Contractor may also visit the Department's web site for additional information: http://www.dec.ny.gov/chemical/8512.html.

II.6 DIESEL EMISSION REDUCTION ACT OF 2006 (NEW REQUIREMENT OF LAW)

On February 12, 2007 the Diesel Emissions Reduction Act took effect as law (the “Law”). Pursuant to new §19-0323 of the N.Y. Environmental Conservation Law (“NYECL”) it is now a requirement that heavy duty diesel vehicles in excess of 8,500 pounds use the best available retrofit technology (“BART”) and ultra low sulfur diesel fuel (“ULSD”). The requirement of the Law applies to all vehicles owned, operated by or on behalf of, or leased by State agencies and State or regional public authorities. They need to be operated exclusively on ULSD by February 12, 2007. It also requires that such vehicles owned, operated by or on behalf of, or leased by State agencies and State or regional public authorities with more than half of its governing body appointed by the Governor utilize BART.

As a contract vendor the Law may be applicable to vehicles used by contract vendors “on behalf of” State agencies and public authorities. All heavy duty diesel vehicles must have BART by December 31, 2012. The Law also provides a list of exempted vehicles. Regulations currently being drafted will provide further guidance as to the effects of the Law on contract vendors using heavy duty diesel vehicles on behalf of the State. The Law also permits waivers of ULSD and BART under limited circumstances at the discretion of the Commissioner of Environmental Conservation. The Law will also require reporting from State agencies and from contract vendors in affected contracts.

Contractor certifies and warrants that all heavy duty vehicles, as defined in NYECL §19-0323, to be used under this contract, will comply with the specifications and provisions of NYECL §19-0323, and any regulations promulgated pursuant thereto, which requires the use of BART and ULSD, unless specifically waived by NYSDEC. Qualification and application for a waiver under this Law will be the responsibility of the Contractor.

II.7 VENDOR RESPONSIBILITY

The Contractor shall at all times during the Contract term remain responsible. The Contractor agrees, if requested by the Commissioner of OGS or her designee, to present evidence of its continuing legal authority to do business in New York State, integrity, experience, ability, prior performance, and organizational and financial capacity.

The Commissioner of OGS or her designee, in his or her sole discretion, reserves the right to suspend any or all activities under this Contract, at any time, when he or she discovers information that calls into question the responsibility of the Contractor. In the event of such suspension, the Contractor will be given written notice outlining the particulars of such suspension. Upon issuance of such notice, the Contractor must comply with the terms of the suspension order. Contract activity may resume at such time as the Commissioner of OGS or her designee issues a written notice authorizing a resumption of performance under the Contract.

Upon written notice to the Contractor, and a reasonable opportunity to be heard with appropriate OGS officials or staff, the Contract may be terminated by the Commissioner of OGS or her designee at the Contractor’s expense where the Contractor is determined by the Commissioner of OGS or her designee to be non-responsible. In such event, the Commissioner of OGS or her designee may complete the contractual

requirements in any manner he or she may deem advisable and pursue available legal or equitable remedies for breach.

In no case shall such termination of the Contract by the State be deemed a breach thereof, nor shall the State be liable for any damages for lost profits or otherwise, which may be sustained by the Contractor as a result of such termination.

II.8 USE OF RECYCLED OR REMANUFACTURED MATERIALS

New York State, as a member of the Council of Great Lakes Governors, supports and encourages vendors to use recycled, remanufactured or recovered materials in the manufacture of products and packaging to the maximum extent practicable without jeopardizing the performance or intended end use of the product or packaging unless such use is precluded due to health or safety requirements or product specifications contained herein. Refurbished or remanufactured components or products are required to be restored to original performance and regulatory standards and functions and are required to meet all other requirements of this bid solicitation. Warranties on refurbished or remanufactured components or products must be identical to the manufacturer's new equipment warranty or industry's normal warranty when remanufacturer does not offer new equipment. See "*Remanufactured, Recycled, Recyclable or Recovered Materials*" in Appendix B, OGS General Specifications.

II.9 PURCHASE ORDERS AND INVOICING

General - All orders and invoices/vouchers shall include the contract number and a line by line listing of separate charges. All matters pertaining to registration and licensing of a vehicle are the responsibility of the ordering Authorized User.

Purchase Orders Involving Price Lists - Purchase orders are to include the following information when a vehicle or Option is purchased from a price list:

a. The name of the OEM or Non-OEM provider, number and date of the price list;
b. Product description;
c. Product code/manufacturer number;
d. Full MSRP for each product/Option/accessory;
e. NYS discount as applicable;
f. Liquidated damages, if any;
g. Calculation of NYS net contract price; and
h. Specific designation of special price which may be better than the NYS net Contract price.

Invoices - Authorized Users are instructed not to process invoices that do not include the required information set forth below. Invoices must be detailed and include in the body of the invoice or an attachment to the invoice **all** of the following items. Failure to comply may result in lengthy payment delays.

Invoices shall include, at a minimum, the following information:

a. Contract Number;
b. Purchase Order Number;
c. Contract Item Number;
d. Factory Invoice Price;
e. Dealer Discount;
f. Manufacturer’s Bid Assistance;
g. Line item breakdown of all charges;
h. Breakdown of Liquidated Damages (see III.11.5 *Liquidated Damages*);
i. If Options are purchased, they must be listed separately, line by line on the same invoice as the vehicle and include the MSRP, contract discount, net price and name of the provider if non-OEM.
j. Line item breakdown of any deletion; and
k. Contractor’s cost (invoice amount from Contractor’s supplier/OEM factory) to be shown.

II.10 CONTRACT PAYMENTS

Payments cannot be processed by Authorized Users until the vehicles have been delivered and accepted in accordance with Section III.9 *Delivery*. Payment will be based on any invoice used in the Contractor's normal course of business. However, such invoice must contain all requirements in Section II.9 *Purchase Orders and Invoicing*, including description of the vehicles as well as vendor identification number.

Authorized Users that are State Agencies are required to forward properly completed vouchers to the Office of the State Comptroller for audit and payment. All Authorized Users are urged to process every completed voucher expeditiously giving particular attention to those involving cash discounts for prompt payment.

If the contract terms indicate political subdivisions and others authorized by law are allowed to participate, those entities are required to make payments directly to the Contractor. Prior to processing such payment, the Contractor may be required to complete the ordering non-State agency's own voucher form.

II.11 NOTE TO AUTHORIZED USERS

When placing purchase orders under the contract(s), the Authorized User should be familiar with and follow the terms and conditions governing its use. The authorized user is accountable and responsible for compliance with the requirements of public procurement processes. The Authorized User, when purchasing from OGS contracts, should hold the contractor accountable for contract compliance and meeting the contract terms, conditions, specifications, and other requirements. Also, in recognition of market fluctuations over time, authorized users are encouraged to seek improved pricing whenever possible. Authorized Users have the responsibility to document purchases which should include:

- a statement of need and associated requirements,
- obtaining all necessary prior approvals,
- a summary of the contract alternatives considered for the purchase,
- the reason(s) supporting the resulting purchase (e.g., show that basis for the selection among multiple contracts at the time of purchase was the most practical and economical alternative and was in the best interests of the State).

MSRP and Factory Invoice Verification – An Authorized User may verify Factory Invoice and MSRP information, especially for Options. Websites with Factory Invoice and MSRP information include:

Edmunds:	http://www.edmunds.com/ and http://www.edmunds.com/new/index.html
Kelly Blue Book:	http://www.kbb.com/ and http://www.kbb.com/kb/ki.dll/ke.kb.sp?kbb&&&newCars;slp
Intelli Choice:	http://www.intellichoice.com/
NADA:	http://www.nadaguides.com/ and http://www.nadaguides.com/autohome2.aspx?Lnk=1&wSec=10&wPr=0&wPg=2111
Yahoo:	http://autos.yahoo.com/

II.12 "OGS OR LESS" GUIDELINES APPLY TO THIS CONTRACT

Purchases of the products included in the Contract are subject to the "OGS or Less" provisions of State Finance Law§ 163(3)(a)(.v). This means that State agencies can purchase products from sources other than the Contractor provided that such products are substantially similar in form, function or utility to the products herein and are:

1. lower in price

   -and/or-

2. available under terms which are more economically efficient to the State agency (e.g. delivery terms, warranty terms, etc.).

Agencies are reminded that they must provide the State Contractor an opportunity to match the non-contract savings at least two business days prior to purchase. In addition, purchases made under "OGS or Less" flexibility must meet all requirements of law including, but not limited to, advertising in the New York State Contract Reporter, prior approval of the Comptroller's Office and competitive bidding of requirements exceeding the discretionary bid limit. State agencies should refer to Procurement Council Bulletin "OGS or Less Purchases" for complete procedural and reporting requirements.

II.13 NON-STATE AGENCIES PARTICIPATION IN CENTRALIZED CONTRACTS

New York State political subdivisions and others authorized by New York State law may participate in contracts. These include, but are not limited to local governments, public authorities, public school and fire districts, public and nonprofit libraries, and certain other nonpublic/nonprofit organizations. See "*Participation in Centralized Contracts*" in Appendix B, *OGS General Specifications*. For purchase orders issued by the Port Authority of New York and New Jersey (or any other authorized entity that may have delivery locations adjacent to New York State), the terms of Section III.8 *Price* shall be modified to include delivery to locations adjacent to New York State.

Upon request, all eligible non-State agencies must furnish Contractors with the proper tax exemption certificates and documentation certifying eligibility to use State contracts. Questions regarding an organization's eligibility to purchase from New York State Contracts may also be directed to OGS NYSPro Customer Services at 518-474-6717.

II.14 EXTENSION OF USE

This Contract may be extended to additional States or governmental jurisdictions upon mutual written agreement between New York State (the lead contracting State) and the Contractor. Political subdivisions and other authorized entities within each participating State or governmental jurisdiction may also participate in this contract if such State normally allows participation by such entities. New York State reserves the right to negotiate additional discounts based on any increased volume generated by such extensions.

II.15 EXTENSION OF USE COMMITMENT

The Contractor agrees to honor all orders from State Agencies, Political Subdivisions and others authorized by law (see Section II.14 *Extension of Use*) which are in compliance with the pricing, terms, and conditions set forth in the resulting contract document.

Any unilateral limitations/restrictions imposed by the Contractor and/or manufacturer on eligible Authorized Users will be grounds for rejection of the bid or cancellation of the contract. If a contract, or any portion thereof, is canceled for this reason, any additional costs incurred by the eligible purchaser will be borne by the Contractor.

II.16 CONTRACT PERIOD AND RENEWALS

The contract shall commence from the date of receipt of all necessary approvals and shall terminate upon the OEM's MY Build-Out Date, or depletion of all stocks, whichever occurs last for the 2015 Model Year of the contract. Contractors will notify OGS, in writing, of the OEM's MY Build-Out Date. Such notification <u>must</u> be submitted immediately upon the Contractor being notified by the OEM.

II.16.1 MUTUAL EXTENSION OF TIME PERIOD

If mutually agreed between NYSPro and the Contractor, the next Model Year (MY) vehicle may be supplied if MY Build-Out Date has occurred for the Item awarded and the next MY has not been awarded under a new solicitation. For each next MY after Contract Award, Contractor shall supply NYSPro with documentation that the next MY vehicle meets or exceeds the specifications for the vehicle as set forth in the resultant contract(s). Prices shall be calculated in accordance with Section III.8.7 *Next Model Year and Replacement Vehicle Pricing*, and all terms and conditions remain in effect. Once the next MY has been awarded under a new solicitation, Contractor shall not accept Purchase Orders for the Contract. If the next MY has not been

awarded, Contractor may continue to supply current and next MY vehicles until depletion of stock or manufacturer's production build-out. The State reserves the right to terminate the Contract with cancellation terms of this Contract.

If mutually agreed between NYSPro and the Contractor, the Contract may be extended under the same terms and conditions for an additional period(s) of up to five years; extensions may be exercised on a continuing basis such as an additional three month, six month, twelve month or 24 month periods.

II.16.2 SHORT TERM EXTENSION

In the event the replacement contract has not been issued, any contract let and awarded hereunder by the State, may be extended unilaterally by the State for an additional period of up to one month upon notice to the Contractor with the same terms and conditions as the original contract including, but not limited to, quantities (prorated for such one month extension), prices, and delivery requirements. With the concurrence of the Contractor, the extension may be for a period of up to three months in lieu of one month. However, this extension terminates should the replacement contract be issued in the interim. If MY Build-Out Date for an Item has been reached, Contractor may offer next MY in accordance with Section II.16.1 *Mutual Extension of Time Period* for the extensions authorized by this section.

II.17 POOR PERFORMANCE

Authorized Users should notify NYSPro Customer Services promptly if the Contractor fails to meet the requirements of this contract. Performance which does not comply with requirements or is otherwise unsatisfactory to the Authorized User should also be reported to Customer Services:

Office of General Services New York State Procurement Customer Services Coordination 38th Floor Corning Tower Empire State Plaza Albany, NY 12242	Tel: 518-474-6717 Fax: 518-474-2437 E-mail: customer.services@ogs.ny.gov

II.18 BASIC WARRANTY

See "*Additional Warranties*" in Appendix B, §72.

Normal wear and tear items will be warranted in accordance with Manufacturer's Standard Warranty.

The Contractor shall warrant the vehicle and furnished equipment against parts failure or malfunction due to design, construction or installation errors, defective workmanship, and missing or incorrect parts. Where Options are to be supplied, they must be compatible with the rest of the product.

The manufacturer's standard warranty will apply.

Warranties shall be honored by all the manufacturer's dealers in New York State.

The warranty period for all coverage shall begin on the date vehicle is accepted or put in service, whichever occurs later.

Where vehicles develop chronic failures during the warranty period, Contractor shall extend the warranty period for an equal period of time following correction of such failures, as indicated in the original warranty.

II.19 ADVERTISING

In addition to the requirements set forth in Appendix B, §20 *Advertising Results*, any Contractor advertisements, promotional literature and/or contract description(s) of contract awards must be reviewed and approved by the Office of General Services, NYSPro prior to issuance. Contractor may not advertise its name on the vehicle.

II.20 OVERLAPPING CONTRACT ITEMS

Products/services available in the resulting contract may also be available from other New York State contracts. Authorized Users will be advised to select the most cost effective procurement alternative that meets their program requirements and to maintain a procurement record documenting the basis for this selection.

II.21 IRAN DIVESTMENT ACT

By entering into this Contract, Contractor certifies that it is not on the "Entities Determined To Be Non-Responsive Offerers Pursuant to The New York State Iran Divestment Act of 2012" list ("Prohibited Entities List") posted on the OGS website at: http://www.ogs.ny.gov/about/regs/docs/ListofEntities.pdf and further certifies that it will not utilize on such Contract any subcontractor that is identified on the Prohibited Entities List. Contractor agrees that should it seek to renew or extend this Contract, it must provide the same certification at the time the Contract is renewed or extended. Contractor also agrees that any proposed Assignee of the Contract will be required to certify that it is not on the Prohibited Entities List before OGS may approve a request for Assignment of Contract.

During the term of the Contract, should OGS receive information that a person (as defined in State Finance Law §165-a) is in violation of the above-referenced certifications, OGS will review such information and offer the person an opportunity to respond. If the person fails to demonstrate that it has ceased its engagement in the investment activity which is in violation of the Act within 90 days after the determination of such violation, then OGS shall take such action as may be appropriate and provided for by law, rule, or contract, including, but not limited to, seeking compliance, recovering damages, or declaring the Contractor in default.

OGS reserves the right to reject any request for renewal, extension, or assignment for an entity that appears on the Prohibited Entities List prior to the renewal, extension, or assignment of the Contract, and to pursue a responsibility review with Contractor should it appear on the Prohibited Entities List hereafter.

II.22 PARTICIPATION BY MINORITY GROUP MEMBERS AND WOMEN WITH RESPECT TO STATE CONTRACTS: REQUIREMENTS AND PROCEDURES

I. General Provisions

A. OGS is required to implement the provisions of New York State Executive Law Article 15-A and 5 NYCRR Parts 142-144 ("MWBE Regulations") for all State contracts as defined therein, with a value (1) in excess of $25,000 for labor, services, equipment, materials, or any combination of the foregoing or (2) in excess of $100,000 for real property renovations and construction.

B. The Contractor agrees, in addition to any other nondiscrimination provision of the Contract and at no additional cost to OGS, to fully comply and cooperate with OGS in the implementation of New York State Executive Law Article 15-A. These requirements include equal employment opportunities for minority group members and women ("EEO") and contracting opportunities for New York State Certified minority and women-owned business enterprises ("MWBEs"). Contractor's demonstration of "good faith efforts" pursuant to 5 NYCRR §142.8 shall be a part of these requirements. These provisions shall be deemed supplementary to, and not in lieu of, the nondiscrimination provisions required by New York State Executive Law Article 15 (the "Human Rights Law") or other applicable federal, state or local laws.

C. Failure to comply with all of the requirements herein may result in a finding of non-responsiveness, non-responsibility and/or a breach of contract, leading to the withholding of funds, suspension or termination of the Contract or such other actions or enforcement proceedings as allowed by the Contract.

II. Contract Goals

For purposes of this procurement, OGS conducted a comprehensive search and determined that this contract does not offer sufficient opportunities to set goals for participation by MWBEs as subcontractors,

service providers and suppliers to Contractor. Contractor is however encouraged to make every good faith effort to promote and assist the participation of MWBEs on this Contract for the provision of services and materials. To locate MWBEs, the Directory of Certified Businesses can be viewed at: http://www.esd.ny.gov/MWBE/directorySearch.html

III. Equal Employment Opportunity (EEO)

A. Contractor agrees to be bound by the provisions of New York State Executive Law Article 15-A and the MWBE Regulations promulgated by the Division of Minority and Women's Business Development of the Department of Economic Development (the "Division"). If any of these terms or provisions conflict with applicable law or regulations, such laws and regulations shall supersede these requirements.

B. Contractor shall comply with the following provisions of Article 15-A:

a) Contractor and Subcontractors shall undertake or continue existing EEO programs to ensure that minority group members and women are afforded equal employment opportunities without discrimination because of race, creed, color, national origin, sex, age, disability or marital status. For these purposes, EEO shall apply in the areas of recruitment, employment, job assignment, promotion, upgrading, demotion, transfer, layoff, or termination and rates of pay or other forms of compensation.

b) The Contractor shall:

1) Submit an EEO policy statement to OGS with the bid, or

2) If Contractor does not have an existing EEO policy statement, the Contractor shall sign and submit Appendix D, Minority and Women-Owned Business Enterprises and Equal Employment Opportunity Policy Statement, annexed hereto; or

3) Contractor shall certify and affirm that the text set forth in clause 12 of Appendix A, attached hereto and made a part hereof, is Contractor's equal employment opportunity policy.

c) The Contractor's EEO policy statement shall include the following language:

1) The Contractor will not discriminate against any employee or applicant for employment because of race, creed, color, national origin, sex, age, disability or marital status, will undertake or continue existing EEO programs to ensure that minority group members and women are afforded equal employment opportunities without discrimination, and shall make and document its conscientious and active efforts to employ and utilize minority group members and women in its work force.

2) The Contractor shall state in all solicitations or advertisements for employees that, in the performance of the contract, all qualified applicants will be afforded equal employment opportunities without discrimination because of race, creed, color, national origin, sex, age, disability or marital status.

3) The Contractor shall request each employment agency, labor union, or authorized representative of workers with which it has a collective bargaining or other agreement or understanding, to furnish a written statement that such employment agency, labor union, or representative will not discriminate on the basis of race, creed, color, national origin, sex age, disability or marital status and that such union or representative will affirmatively cooperate in the implementation of the Contractor's obligations herein.

4) The Contractor will include the provisions of Subdivisions (a) through (c) of this Subsection 3 and Paragraph "E" of this Section II, which provides for relevant provisions of the Human Rights Law, in every subcontract in such a manner that the requirements of the subdivisions will be binding upon each subcontractor as to work in connection with the Contract.

C. To ensure compliance with this Section, the Contractor shall submit Form EEO 100- Staffing Plan to document the composition of the proposed workforce to be utilized in the performance of the Contract

by the specified categories listed, including ethnic background, gender, and Federal occupational categories. Contractor shall complete the Staffing plan form and submit it as part of their contract.

D. Form EEO 101 - Workforce Employment Utilization Report ("Workforce Report")

Contractor and OGS agree that Contractor is unable to separate out the workforce utilized in the performance of the Contract from Contractor's and/or subcontractor's total workforce and that the information provided on the previously submitted Staffing Plan is Contractor's total workforce during the subject time frame, not limited to work specifically under the contract.

CONTRACTOR SHALL COMPLY WITH THE PROVISIONS OF THE HUMAN RIGHTS LAW, ALL OTHER STATE AND FEDERAL STATUTORY AND CONSTITUTIONAL NON-DISCRIMINATION PROVISIONS. CONTRACTOR AND SUBCONTRACTORS SHALL NOT DISCRIMINATE AGAINST ANY EMPLOYEE OR APPLICANT FOR EMPLOYMENT BECAUSE OF RACE, CREED (RELIGION), COLOR, SEX, NATIONAL ORIGIN, SEXUAL ORIENTATION, MILITARY STATUS, AGE, DISABILITY, PREDISPOSING GENETIC CHARACTERISTIC, MARITAL STATUS OR DOMESTIC VIOLENCE VICTIM STATUS, AND SHALL ALSO FOLLOW THE REQUIREMENTS OF THE HUMAN RIGHTS LAW WITH REGARD TO NON-DISCRIMINATION ON THE BASIS OF PRIOR CRIMINAL CONVICTION AND PRIOR ARREST.

II.23 GENERAL REQUIREMENTS

The State will not be liable for any expense incurred by the Contractor for any parking fees or as a consequence of any traffic infraction or parking violations attributable to employees of the Contractor.

For reasons of safety and public policy, in any contract resulting from this procurement, the use of illegal drugs and/or alcoholic beverages by the Contractor or its personnel shall not be permitted while performing any phase of the work herein specified.

II.24 REPORT OF CONTRACT USAGE

Contractor shall furnish a report of all vehicles provided under the Contract during each quarterly period, no later than the 15th of the month following the close of each quarter. Purchases by Non-state agencies, political subdivisions and others authorized by law shall be reported in the same report and indicated as required. A template for such report is included In Appendix C, Light Duty Vehicles Including Law Enforcement (Statewide) Documents, Number 3, Report of Contract Usage. All fields of information shall be accurate and complete. The report is to be submitted electronically via electronic mail utilizing the template provided in Microsoft Excel 2003, or newer (or as otherwise directed by OGS), to the attention of the individual shown on the front page of the Contract Award Notification and shall reference the Group Number, Award Number, Contract Number, Sales Period, and Contractor's (or other authorized agent) Name, and all other fields required.

II.25 CONTRACTOR INSURANCE REQUIREMENTS

Contractor shall comply with Contractor Insurance Requirements as set forth in Appendix C, Light Duty Vehicles Including Law Enforcement (Statewide) Documents, Number 5, Contractor Insurance Requirements.

SECTION III. SPECIAL TERMS AND CONDITIONS

III.1 EQUIPMENT TO BE FURNISHED WITH AN ITEM

All standard equipment which is provided by the OEM with an Item shall be furnished unless such equipment is expressly deleted by OGS or is specified to be other than standard. When Optional equipment is specified, all components listed in the OEM's data book as being included with the Option shall be furnished.

Everything that is provided as standard by the OEM with the make/model bid must be included, regardless of whether the specification calls for the item or not.

All items required by this solicitation must be factory installed. In the event an item is unavailable from the factory, OGS must be notified and approval of a non-factory item must be requested.

III.1.1 INSTRUCTION MANUALS

Simultaneous with delivery, the Contractor(s) shall furnish to the Authorized User, upon request, a complete instruction manual for the product and for each component supplied. The manual shall include complete instructions for unpacking, inspecting, installing, adjusting, aligning, and operating the product, together with layout and interconnection diagrams, schematic and wiring diagrams, preventive and corrective maintenance procedures, and complete parts lists, manufacturer's catalog numbers, and ordering information, if applicable.

III.1.2 OPERATOR'S MANUAL

The Contractor shall furnish one operator's manual with each vehicle.

III.2 MOTOR VEHICLE REGULATIONS

Each vehicle delivered shall comply with all applicable laws, regulations and directives of New York State and the Federal Government in effect on the date of manufacture.

III.3 EMISSIONS CONTROLS

Vehicles and engines shall comply with all applicable Federal, State and Local laws, regulations and directives in effect on the date of manufacture.

III.4 DMV INSPECTION

All vehicles in LOTS I, II, III, and IV only, must be delivered with complete NYS Inspections. In the event that a vehicle is delivered uninspected, $250 will be deducted from the invoice by the Authorized User to cover the cost of the inspection and to compensate for time. The State reserves the right to cancel a Contract and/or take other action if vehicles are not properly inspected or if the New York State Department of Motor Vehicles inspection sticker is not properly affixed to a vehicle. This section does not apply to vehicles in Lot V.

III.5 PRICE SHEETS AND CATALOGS

Contractor shall be required to furnish, without charge, catalog and nationally published price lists identical to those accepted with their bid, including any changes (additions, deletions, etc.) pursuant to the contract, to Authorized Users who request them.

Catalogs and nationally published price lists may be furnished to Authorized Users in either hard-copy or electronic format. If available in both formats, they shall be furnished in the format preferred by the requesting Authorized User. Upon request, the Contractor shall assist Authorized Users in the use of catalogs and nationally published price lists.

III.6 OPTIONS

The percent discount for Options shall be applied to the MSRP to yield a Contract price for the Option. The Contract price for OEM Options shall include any and all labor, installation, fittings, connections, etc., that might be needed to attach the Option to the vehicle so that the Option operates to the Option's full design capabilities; there shall be no additional up-charges, fees, etc., for adding OEM Options. If an Option for the vehicle is from a Non-OEM provider the Contractor may add normal, published labor rates, to install such Option and, labor shall not be more than what is charged to the public at large.

If the Contractor sells an Option, OEM or Non-OEM, to the public at large with pricing that is lower than the application of the Contract discount from the MSRP, then the price that is charged to the public at large shall be charged to Authorized Users. This shall be clearly shown on the invoice as a "Special Value" or by some other phrase or identifying designation.

III.6.1 OPTIONS, ACCESSORIES, EQUIPMENT, ETC., TO BE ADDED OR DELETED FROM VEHICLES

Authorized Users may purchase the vehicle awarded and choose to have Options, accessories, equipment, features, products, etc., (hereafter referred to as "Options") added or deleted. Such Options will generally be considered OEM, but may be from other suppliers that the OEM may utilize and/or may be considered part of the OEM's standard line of products for the vehicle involved. The Options would normally be readily available from the "factory" when the OEM is building the vehicle and would normally be expected to be listed in the OEM's offering of Options. Such Options would be expected to be listed in vehicle publications such as the "PC Car Book".

A. DELETIONS

It is anticipated that Authorized Users may delete Options that have been required by the solicitation's specifications for the base vehicle involved. Contractors will be required to honor all such deletions.

When an Option is being deleted, the Contractor must give the Authorized User proof of the Contractor's full cost (invoice price from OEM) of the Option, as shown in the PC Car Book. If the Option is not in the PC Car Book, the Contractor must provide documentation showing the Contractor's cost for the Option.

Any deletion must clearly be shown on invoice and clearly show cost deduction.

B. ADDITIONS

It is anticipated that Authorized Users may add Options above and beyond that which have been required by the solicitation's specifications for the vehicle involved. Contractor shall be required to honor all such additions.

When an Option is being added, the Contractor must give the Authorized User proof of the MSRP of the Option, as shown in the PC Car Book. If the Option is not in the PC Car Book, the Contractor must provide documentation showing the Contractor's price for the Option from the vendor's catalog.

The percent discount bid as shown in the Contract shall be applied to the MSRP to yield a net/Contract price for the Option. The percent discount shall be understood to include and account for any and all labor, installation, fittings, connections, etc., that might be needed to attach the Option to the vehicle so that it operates to its full design capabilities; there shall be no additional up-charges, fees, etc., for adding OEM Options.

Any addition must clearly show on invoice and clearly show the MSRP, the application of <u>the percent discount</u> for Options and the resultant contract price.

III.6.2 ADDITION OF NON-OEM OPTION PROVIDER AFTER CONTRACT AWARD

The Contractor may offer Non-OEM Options from Non-OEM providers not included under the Contract only with prior-approval from NYSPro. The Contractor must submit a written request for the addition of Non-OEM provider(s) to the NYSPro Contract administrator that includes, at a minimum,

A. The Non-OEM Option provider name;

B. The Non-OEM Option manufacturer name and price list for the non-OEM Options; and

C. An explanation for the addition of the Non-OEM provider to the Contract that includes the Authorized User(s) who have requested the Non-OEM Options, and a description of the non-OEM Options requested.

III.6.3 DOT OPTIONAL PACKAGE

Authorized Users may purchase the DOT Optional Package for Items 3 through 15 in Lot I and Items 10 through 18 in Lot II. Contractor shall provide the DOT Optional Package at the price set forth in Appendix C, Light Duty Vehicles Including Law Enforcement (Statewide) Documents, Number 2, Price Pages, for these Items. When a DOT Optional Package is specified, it shall meet the following requirements:

A. Dupont Chrome Yellow 6578X, School Bus Yellow or manufacturer's equal.

B. **Cab Protector Screen:**

1. Pick up - WeatherGuard No. 1 906-X or equal painted to match the truck cab.
2. Cargo Van Bulkhead - WeatherGuard No.86000-X (full size van)/87000-X (mini van) or equal. **No bulkhead required for Passenger van unless specified**.

C. LED Amber Flashing Beacons - Federal Signal Model Federal Signal flashing light part #252650-02NYSDOT **or** Star Warning Systems flashing part #255HTCL-A-NY **or** Whelen flashing part #L21-NYS.

LED Amber Flashing Beacons shall be controlled by a fused/breakered, pilot lighted and labeled (no Dymo tape) switch mounted in the dash.

Pick-up Trucks/Suburbans/Large Vans:

Dual flashing LED beacons affixed to the vehicle roof.

Mounting specifics:

1. **Pick-up truck:** left & right side mounted, if so equipped cab shield/protector mounted.
2. **Suburbans / Large vans:** forward & rear roof mounted.

Minivans (Passenger Vehicles):

Single flashing LED beacon center mounted on the forward top of the cab.

D. Striping on the Front Bumper (if painted) and Rear Doors or tailgate -

1. DuPont DuLux Blue - Six (6) inch wide, eighteen (18) inch on center at 45 degrees with a minimum of four (4) stripes DuPont DuLux 6014 Blue. See diagram on next page.
2. 3M Blue Tape - As 4a except utilizing retro-reflective blue, yellow or blue and yellow stripes (3M 580-75 / Scotchlite 680-75 or equal) six (6) inch wide reflective tape/sheeting.

E. Fire Extinguisher - 2.5 pound dry chemical ABC rated with mounting bracket.

F. Three-piece Triangle "Flare" kit with storage box for roadside emergency use.

G. Vehicle Paint Striping as specified below.

VEHICLE PAINT STRIPING NYS DEPARTMENT OF TRANSPORTATION
FRONT VIEW (Bumper)

(Curbside) (Streetside)

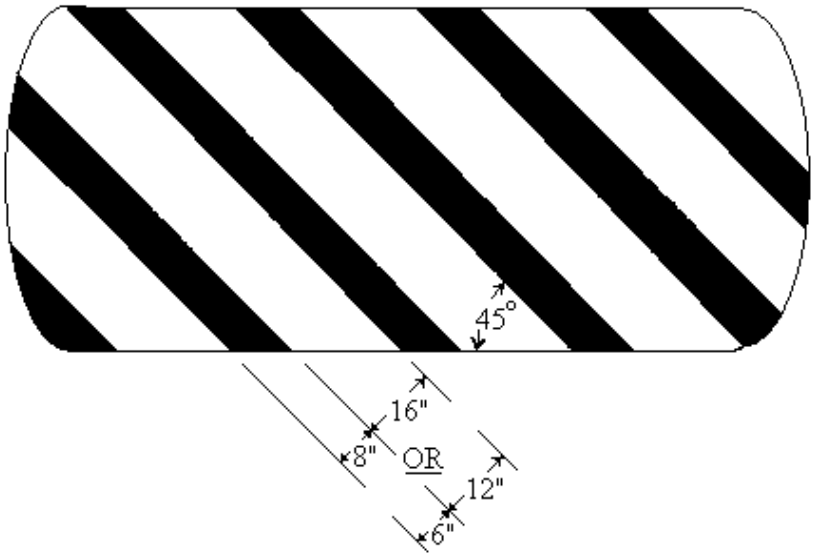

REAR VIEW (Tailgate, Stake-Racks, Van Door/s, Etc.)

(Streetside) (Curbside)

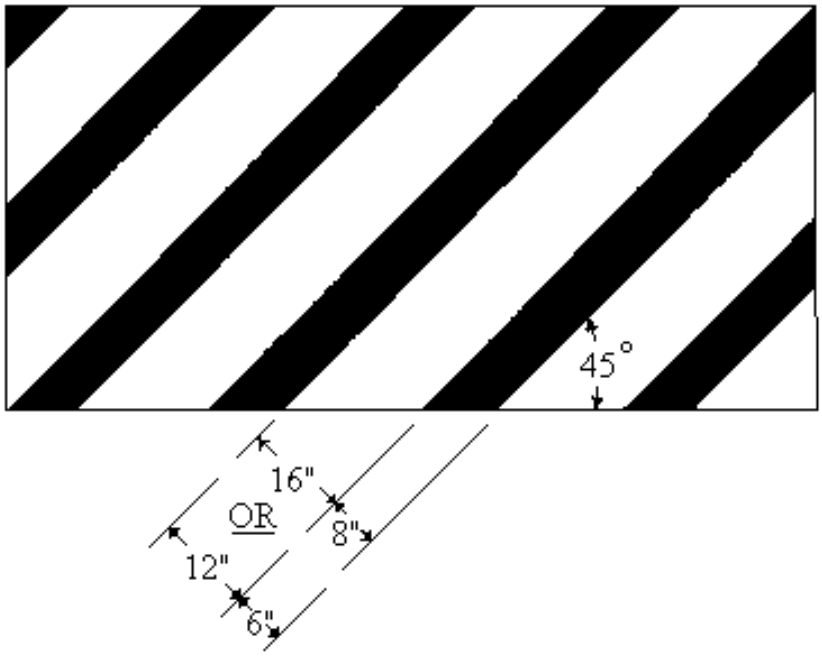

Units shall have 6" Wide Stripes (minimum) at 18" On Center

Door-Panel/s shall have (a minimum of) Four Stripes

III.7 REPLACEMENT VEHICLES

The State may permit the Contractor to offer a replacement model or a replacement product line if the model series or the product line originally awarded is discontinued, replaced, or made unavailable by the Original Equipment Manufacturer (OEM). The Unit Price for such replacement shall be determined in accordance with Section III.8.7 *Next Model Year and Replacement Vehicle Pricing*.

III.8 PRICE

The Unit Price for each Item is set forth in Appendix C, Light Duty Vehicles Including Law Enforcement (Statewide) Documents, Number 2, Price Pages.

Non-OEM Option providers, if any, are set forth in Appendix C, Light Duty Vehicles Including Law Enforcement (Statewide) Documents Number 4, Contractor Information.

In the event that an Item awarded to a Contractor has reached Final Order Due Date prior to Contract Award and is no longer available, Contractor shall provide the Item using next MY pricing, calculated in accordance with Section III.8.7 *Next Model Year and Replacement Vehicle Pricing*, or current MY pricing as set forth in Contractor's Bid, whichever is less.

The Manufacturer's Bid Assistance and/or Dealer Discount may be increased by Contractor at any time during the Contract term, but may not be decreased for the entire term of the contract.

III.8.1 UNIT PRICE FOR LOTS I, II, III, AND IV

The Unit Price for each Item shall include all customs duties and charges, all vehicle preparation and clean-up charges, New York State motor vehicle inspection, installation charges and all other incidentals normally included with providing and delivery of a vehicle, including the manufacturer's fees (e.g., destination charges). Delivery shall be FOB Destination.

Contractors will be required to deliver vehicles anywhere within New York State boundaries. However Authorized Users, at their sole discretion, may pick up vehicle(s) at Contractor or Courtesy Dealer locations and shall be given a Pick Up Credit as specified in by the Contractor in Appendix C, Light Duty Vehicles Including Law Enforcement (Statewide) Documents, Number 1, Price Pages. This credit shall be included as a separate line item on the Authorized User's invoice.

III.8.2 UNIT PRICE FOR LOT V

The Unit Price for each Item shall include all transportation costs. Vehicles shall be drop shipped directly from the factory to each New York State Police location. Delivery shall be FOB Destination. Delivery instructions will be detailed on the Purchase Order.

Dealer's new vehicle servicing preparation will be performed by New York State Police personnel, not the Contractor. In addition, DMV Inspection is NOT required for Items in Lot V. All matters pertaining to registration and licensing are the responsibility of the New York State Police, not the Contractor. Pricing for Items in Lot V shall not include any charge for new vehicle servicing preparation, registration, or licensing.

The New York State Police may stagger the delivery of these vehicles over a period of time. For example, order forty (40) vehicles per month with instructions to deliver four (4) vehicles to each of the ten (10) troops listed below over a period of time.

Following are the delivery locations for Items in Lot V:

NEW YORK STATE POLICE (STATEWIDE)

Troop A, Batavia, NY
Troop B, Ray Brook, NY
Troop C, Sidney, NY
Troop D, Oneida, NY
Troop E, Canandaigua, NY
Troop F, Middletown, NY
Troop G, Latham, NY
Troop K, Millbrook, NY
Troop L, East Farmingdale, NY
Troop T, Albany, NY

III.8.4 LOWER PRICING

The State reserves the right to negotiate lower pricing, or to advertise for bids, whichever is in the State's best interest as determined by the Commissioner, in the event of a significant decrease in market price of any product listed. In addition, if the Contractor's normal pricing to the public or to the trade in general is less than the net/contract pricing with the application of a contract discount, etc., then the normal pricing to the public or to the trade in general shall also be granted by Contractors to Authorized Users.

III.8.5 GOVERNMENT MANDATED PROGRAM PRICE ADJUSTMENT

An adjustment in price may be permitted if a government mandated program, (e.g., a new standard for emissions), takes effect and suitable documentation is furnished to the State and the State determines the requested price change is verifiable and is reasonable. Such a price adjustment may be permitted for only a limited time, since such an adjustment would eventually be reflected in the Factory Invoice Price.

III.8.6 DMV INSPECTION

Items in Lots I, II, III and IV must be delivered with complete NYS Inspections. See Section III.8.6 *DMV Inspection*.

III.8.7 NEXT MODEL YEAR AND REPLACEMENT VEHICLE PRICING

A. Next Model Year pricing shall be calculated by taking the new MY Factory Invoice Price (including all standard and Optional required equipment for each vehicle in the resultant contract(s)), and subtracting the Contractor's Manufacturer's Bid Assistance and Dealer Discount. The next Model Year Unit Price shall be calculated as follows:

	Old Model Year	New Model Year
Factory Invoice Price	$21,500.00	$22,000.00
Manufacturer's Bid Assistance	$3,000.00	$3,000.00
Dealer Discount (e.g. 4% of Factory Invoice) (may include Delivery cost for FOB Destination)	$860.00	$880.00
Unit Price (Factory Invoice Price minus Manufacturer's Bid Assistance and Dealer Discount)	$17,640.00	$18,120.00

This Unit Price would apply to all purchases for the Item, The next Model Year or replacement vehicle Unit Price for an Item shall not be effective until the date of NYSPro approval of the pricing for the next Model Year or replacement vehicle for the Item(s). See also Section II.16 *Contract Period and Renewals*, Section III.6.1 *Options, Accessories, Equipment, Etc., to be Added or Deleted from Vehicles*, and Section II.9 *Purchase Orders and Invoicing*.

B. In the event that the State permits the Contractor to offer a replacement model or a replacement product line if the model series or the product line originally awarded is discontinued, replaced, or made unavailable by the OEM pursuant to Section III.7 *Replacement Vehicles*, the Unit Price for such replacement shall also be calculated as described in "A" above.

C. In order to receive approval for next Model Year or replacement vehicle pricing for an Item, the Contractor must submit the following to NYSPro upon request:

1. Updated Price Pages for the resultant Contract, in Excel format, with pricing updated to reflect the next Model Year or replacement vehicle pricing;
2. A Dealer Invoice for the Item;
3. OEM Vehicle Specifications for the next Model Year or replacement vehicle; and

OGS reserves the right to request additional information that may be needed in order to determine that the next Model Year or replacement vehicle meets the minimum Item specifications as set forth in the resultant contract(s).

III.9 DELIVERY

Delivery shall be expressed in number of calendar days required to make delivery after receipt of a Purchase Order (After Receipt of Order ("ARO")). Product is required as soon as possible. Additionally, pursuant to Appendix B, §47, Shipping/Receipt of Product, freight terms are FOB Destination.

Delivery shall be made in accordance with instructions on Purchase Order from each Authorized User. If there is a discrepancy between the Purchase Order and what is listed on the Contract, it is the Contractor's obligation to seek clarification from the ordering Authorized User and, if applicable, from OGS NYSPro. For Lot V Items, the Contractor shall make prior arrangements with the State Police before any deliveries are made.

III.9.1 EXPANSION OF DELIVERY POINTS

Upon mutual agreement, delivery locations may be expanded per Section II.13 *Non-State Agencies Participation in Centralized Contracts*, II.17 *Extension of Use* and II.18 *Extension of Use Commitment*, incorporated herein.

III.9.2 CONDITION ON DELIVERY

If a vehicle is delivered with minor deviations or improper servicing, the Contractor must arrange to have the necessary work done within 48 hours (exclusive of Saturdays, Sundays and Federal or NYS Holidays) after receipt of written notification from the Authorized User and/or the Office of General Services. If Contractor cannot arrange to have the necessary work done within such time period, the corrections shall be made by an entity of the Authorized User's choosing and Contractor will be required to reimburse the Authorized User for this expense within 30 calendar days of request.

No name other than the manufacturers shall appear on the vehicle.

At point of acceptance, the vehicle odometer reading shall not exceed, in miles, the distance between the Contractor's or Courtesy Delivery Dealer's place of business and the point of delivery plus 50 miles. In the event a vehicle is delivered with mileage exceeding such amount, $5.00 for each mile up to 100 miles and $10.00 each mile over 100 miles will be deducted from each Invoice. Vehicles exceeding the aforementioned miles by more than 300 miles may be rejected.

III.9.3 DELIVERY CERTIFICATION

Contractor shall secure a signed receipt from the Authorized User certifying delivery of vehicle and odometer reading. In the event deficiencies are later noted and a properly signed receipt cannot be found, Contractor will be responsible for certifying delivery and odometer reading.

III.9.4 SHIPPING DATES AND DELIVERY TIME

The following provisions for Shipping Dates and Delivery Time shall apply:

A. Contractor shall provide written acknowledgement of orders within five (5) business days after receipt of order.

B. Contractor shall provide ordering Authorized User with anticipated shipping date of completed vehicle with written acknowledgement of order.

C. Contractor shall furnish the Authorized User with written acknowledgement of the shipping date at least 14 calendar days prior to shipment.

D. If shipment will not be made within the delivery time, the Contractor is required to notify the Authorized User in writing at least 14 calendar days prior to the latest date of the original delivery obligation. This

notification must include the reasons for the delay and the latest date the vehicle will be shipped. Should the delay not be acceptable to the Authorized User, appropriate contract default proceedings will be initiated under Section III.9.5, *Default On Delivery*. Failure to supply timely written notification of delay may be cause for default proceedings.

E. All correspondence on shipping dates and delivery time shall be directed to the ordering Authorized User's contact person.

III.9.5 DEFAULT ON DELIVERY

If during the Contract period an Authorized User has issued a Purchase Order on or before Final Order Due Date for an Item, and that Item becomes unavailable or cannot be supplied for any reason (except as provided for in Appendix B §61 *Savings/Force Majeure*), following the issuance of the Purchase Order, a substitute Item deemed by NYSPro to be equal to the specifications for the Item in the resultant contract(s), must be supplied by Contractor if requested by the Authorized User. If a Current Model Year substitute vehicle is not available or not deemed equal to the specifications for the Item in the resultant contract(s), then Contractor must supply a similar vehicle from the next Model Year that meets the specifications for the Item in the resultant contract(s). The price for substitute vehicles shall be equal to or less than the Unit Price for the vehicle in the resultant contract(s).

Section III.8.7 *Next Model Year and Replacement Vehicle Pricing* does not apply to substitute vehicles provided under this section.

Alternatively, the Authorized User may, at their sole discretion, cancel the order and purchase the vehicle from other sources. In such event the Contractor shall reimburse the Authorized User for all excess costs over the NYS net contract price .

III.9.6 LIQUIDATED DAMAGES

In the event of a delay or default in any delivery the Authorized User shall be entitled to and shall assess against the Contractor as liquidated damages and not by way of penalty, a sum calculated as follows:

Ten dollars per day per vehicle to compensate for delay, and other loses, detriments and inconveniences attendant upon such delay from the end of the grace period commencing from the time delivery was due under the contract. A grace period of seven calendar days commencing on and including the contract date for delivery shall be extended to the vendor prior to the assessment of such liquidated damages. Notice is hereby given to the vendor that despite the extensions of the grace period herein specified - TIME SHALL BE AND IS OF THE ESSENCE IN REGARD TO DELIVERY OF THE VEHICLES.

Liquidated damages, if assessed, shall be deducted from the purchase order price for each vehicle delivered against such purchase order.

III.10 SERVICE

PRIOR DELIVERY SERVICING

Prior service by authorized representatives of the vehicle and equipment manufacturers must be available within New York State.

For Lot I, II III and IV Items only, prior to delivery, each vehicle shall be completely serviced by the Contractor or by an authorized dealer of the manufacturer in a modern, properly equipped service shop. Service shall include not less than the following:

- Lubrication,
- Wash,
- Engine tune-up,
- Wheel alignment,
- NY State Inspection,
- Body condition, and
- All other checks and adjustments required for proper complete servicing of a new vehicle.

Particular attention shall be given to door alignment, weather stripping, hardware, paint condition and tagging of cooling system. It shall be the Contractor's responsibility to ensure at that time that all components and accessories specified have been properly installed.

Lot V vehicles do NOT require prior-delivery servicing.

POST DELIVERY SERVICING – ALL LOTS

Post delivery service by authorized representatives of the vehicle and equipment manufacturers must be available within New York State for Items in all Lots. Post delivery service shall be performed in a modern, properly equipped service shop.

III.11 PILOT MODEL FOR LOT V

If requested in writing by the New York State Police, Contractor shall provide as directed a pilot model vehicle for inspection for Items in Lot V. The inspection, if requested by the New York State Police, shall be conducted at the manufacturer's assembly plant or up-fit facility. The New York State Police can request one vehicle inspection per pilot model. Contractor will be responsible for the reimbursement of all costs incurred by up to two NYS representatives to travel to the inspection site. Reimbursement for meals and lodging will be on a per diem basis in accordance with the employee's negotiating unit agreements. There is a set per diem allowance for meals, lodging and incidentals regardless of where lodging was obtained. These rates can be found on the Federal website http://www.gsa.gov/portal/category/21287. The Contractor shall make no other deliveries under the Contract until notified, in writing, that the pilot model is approved. The pilot model shall be ready for inspection within 45 calendar days after ordering date. The New York State Police reserves the right to drive the pilot model(s) from the point of manufacture to the destination point.

III.12 AVAILABILITY

Vehicles may be sold from existing stock if they are in compliance with the contract specifications and pricing. In no way shall Options be added to these vehicles without the consent of the ordering Authorized User. In all cases Option pricing shall be in accordance with contract requirements.

"Demos," "Used" or prior Model Year vehicles shall not be sold without the prior written approval of NYSPro.

Contractors should not pre-order vehicles for the contract with Options or Option packages not typically purchased under this contract. Authorized Users are encouraged to contact NYSPro if they are being asked to purchase vehicles from pre-existing stock that contain numerous Options in lieu of normal contract vehicles.

III.13 RECALLS

The Contractor must immediately notify NYSPro of any recalls pertaining to Contract vehicles.

III.14 FORD FIN CODE NUMBER

New York State and Ford Motor Company have reached an understanding regarding Ford's FIN Code requirements. For further information, please contact Ford Motor Company Government Account Manager, Donald Cobb by telephone at 203-971-8672 or via email at dcobb@ford.com.

III.15 PERFORMANCE AND BID BONDS

There are no BONDS for this Contract. In accordance with Appendix B, §58 Performance/Bid Bond, the Commissioner of OGS has determined that no performance, payment or Bid bond, or negotiable irrevocable letter of credit or other form of security for the faithful performance of the Contract shall be required at any time during the Term for resulting Contracts.

III.16 DISPUTE RESOLUTION POLICY

It is the policy of Office of General Services New York State Procurement (NYSPro) to provide vendors with an opportunity to administratively resolve disputes, complaints or inquiries related to NYSPro bid solicitations or contract awards. NYSPro encourages vendors to seek resolution of disputes through consultation with NYSPro staff. All such matters will be accorded impartial and timely consideration. Interested parties may also file formal written disputes. A copy of NYSPro's Dispute Resolution Procedures for Vendors may be obtained by contacting the person shown on the front of this Invitation for Bids or through the OGS website (http://ogs.ny.gov/BU/PC/BizInfo.asp, (click on Dispute Resolution Procedures).

III.17 CAPTIONS

The captions contained in this Contract are intended for convenience and reference purposes only and shall in no way be deemed to define or limit any provision thereof.

III.18 SEVERABILITY

If any provision of this Contract is deemed invalid or unenforceable, such determination shall have no effect on the balance of the Contract, which shall be enforced and interpreted as if such provision was never included in the Contract.

III.19 COUNTERPARTS

This Agreement may be executed in one or more counterparts, each of which shall be deemed to be an original, but all of which together shall constitute the same Agreement. Any signature page of any such counterpart may be attached or appended to any counterpart to complete a fully executed counterpart of this Agreement shall bind such party.

III.20 ENTIRE AGREEMENT

This Contract and the referenced appendices constitute the entire agreement between the parties thereto and no statement, promise, condition, understanding, inducement or representation, oral or written, expressed or implied, which is not contained herein shall be binding or valid and the Contract shall not be changed, modified or altered in any manner except by an instrument in writing executed by the State and the Contractor, with the approval of the Attorney General and the Comptroller for the State of New York. Authorized Users shall not have the authority to modify the terms of the Contract, except as to better terms and pricing for a particular procurement than those set forth herein in accordance with the terms set forth in Appendix B Clauses 40, Modification of Contract Terms, and 44, Purchase Orders.

IN WITNESS WHEREOF, the parties have executed this Agreement as of the date first written above.

The parties further hereby certify that original copies of this executed and approved signature page will be affixed to exact copies of this Agreement being executed simultaneously herewith.

CONTRACTOR

Signature: _____

Printed Name: MICHAEL HOPKINS

Title: SPECIALTY VEHICLE SALES

Company Name: JOE BASIL CHEVROLET, INC

Federal ID: 16-1068991

NYS Vendor ID 1100005392

THE PEOPLE OF THE STATE OF NEW YORK

Signature: Sharon M Buck

Printed Name: Sharon Buck

Title: Assistant Director - NYSPRO

Office of General Services

The acknowledgment must be fully and properly executed by an authorized person. By signing you certify your express authority to sign on behalf of yourself, your company, or other entity and full knowledge and acceptance of this agreement, Appendix A (Standard Clauses For New York State Contracts), Appendix B (OGS General Specifications), and State Finance Law §139-j and §139-k (Procurement Lobbying), and that all information provided is complete, true and accurate. By signing, bidder affirms that it understands and agrees to comply with the OGS procedures relative to permissible contacts as required by State Finance Law §139-j (3) and §139-j (6) (b).

INDIVIDUAL, CORPORATION, PARTNERSHIP, OR LLC ACKNOWLEDGMENT

STATE OF NEW YORK }

: **Sworn Statement:**

COUNTY OF ERIE }

On the 9TH day of DECEMBER in the year 2013, before me personally appeared MICHAEL HOPKINS, known to me to be the person who executed the foregoing instrument, who, being duly sworn by me did depose and say that _he maintains an office at JOE BASIL CHEVROLET, INC and further that:

[Check One]

(☐ **If an individual):** _he executed the foregoing instrument in his/her name and on his/her own behalf.

(☒ **If a corporation,** (☐ **a partnership,** ☐ **a limited liability company):** _he is the SPECIALTY VEHICLE SALES CONSULTANT of JOE BASIL CHEVROLET, INC., the *corporation/ partnership/ Limited Liability Company* described in the above instrument; that, _he is authorized to execute the foregoing instrument on behalf of the *corporation/ partnership/ Limited Liability Company* for purposes set forth therein; and that, pursuant to that authority, _he executed the foregoing instrument in the name of and on behalf of said *corporation/ partnership/ Limited Liability Company* as the act and deed of said *corporation/ partnership/ Limited Liability Company*.

TAYLOR JANE GRAJEK
Notary Public - State of New York
No. 01- GR6241268
Qualified in Erie County
My Commission Exp 5/16/2015

Signature of Notary Public

Notary Public Registration No. 01-GR6241268 **State** NY

APPENDIX A

STANDARD CLAUSES FOR NEW YORK STATE CONTRACTS

PLEASE RETAIN THIS DOCUMENT
FOR FUTURE REFERENCE.

December, 2012

TABLE OF CONTENTS

		Page
1.	Executory Clause	3
2.	Non-Assignment Clause	3
3.	Comptroller's Approval	3
4.	Workers' Compensation Benefits	3
5.	Non-Discrimination Requirements	3
6.	Wage and Hours Provisions	3
7.	Non-Collusive Bidding Certification	4
8.	International Boycott Prohibition	4
9.	Set-Off Rights	4
10.	Records	4
11.	Identifying Information and Privacy Notification	4
12.	Equal Employment Opportunities For Minorities and Women	4-5
13.	Conflicting Terms	5
14.	Governing Law	5
15.	Late Payment	5
16.	No Arbitration	5
17.	Service of Process	5
18.	Prohibition on Purchase of Tropical Hardwoods	5-6
19.	MacBride Fair Employment Principles	6
20.	Omnibus Procurement Act of 1992	6
21.	Reciprocity and Sanctions Provisions	6
22.	Compliance with New York State Information Security Breach and Notification Act	6
23.	Compliance with Consultant Disclosure Law	6
24.	Procurement Lobbying	7
25.	Certification of Registration to Collect Sales and Compensating Use Tax by Certain State Contractors, Affiliates and Subcontractors	7

STANDARD CLAUSES FOR NYS CONTRACTS

The parties to the attached contract, license, lease, amendment or other agreement of any kind (hereinafter, "the contract" or "this contract") agree to be bound by the following clauses which are hereby made a part of the contract (the word "Contractor" herein refers to any party other than the State, whether a contractor, licenser, licensee, lessor, lessee or any other party):

1. EXECUTORY CLAUSE. In accordance with Section 41 of the State Finance Law, the State shall have no liability under this contract to the Contractor or to anyone else beyond funds appropriated and available for this contract.

2. NON-ASSIGNMENT CLAUSE. In accordance with Section 138 of the State Finance Law, this contract may not be assigned by the Contractor or its right, title or interest therein assigned, transferred, conveyed, sublet or otherwise disposed of without the State's previous written consent, and attempts to do so are null and void. Notwithstanding the foregoing, such prior written consent of an assignment of a contract let pursuant to Article XI of the State Finance Law may be waived at the discretion of the contracting agency and with the concurrence of the State Comptroller where the original contract was subject to the State Comptroller's approval, where the assignment is due to a reorganization, merger or consolidation of the Contractor's business entity or enterprise. The State retains its right to approve an assignment and to require that any Contractor demonstrate its responsibility to do business with the State. The Contractor may, however, assign its right to receive payments without the State's prior written consent unless this contract concerns Certificates of Participation pursuant to Article 5-A of the State Finance Law.

3. COMPTROLLER'S APPROVAL. In accordance with Section 112 of the State Finance Law (or, if this contract is with the State University or City University of New York, Section 355 or Section 6218 of the Education Law), if this contract exceeds $50,000 (or the minimum thresholds agreed to by the Office of the State Comptroller for certain S.U.N.Y. and C.U.N.Y. contracts), or if this is an amendment for any amount to a contract which, as so amended, exceeds said statutory amount, or if, by this contract, the State agrees to give something other than money when the value or reasonably estimated value of such consideration exceeds $10,000, it shall not be valid, effective or binding upon the State until it has been approved by the State Comptroller and filed in his office. Comptroller's approval of contracts let by the Office of General Services is required when such contracts exceed $85,000 (State Finance Law Section 163.6-a). However, such pre-approval shall not be required for any contract established as a centralized contract through the Office of General Services or for a purchase order or other transaction issued under such centralized contract.

4. WORKERS' COMPENSATION BENEFITS. In accordance with Section 142 of the State Finance Law, this contract shall be void and of no force and effect unless the Contractor shall provide and maintain coverage during the life of this contract for the benefit of such employees as are required to be covered by the provisions of the Workers' Compensation Law.

5. NON-DISCRIMINATION REQUIREMENTS. To the extent required by Article 15 of the Executive Law (also known as the Human Rights Law) and all other State and Federal statutory and constitutional non-discrimination provisions, the Contractor will not discriminate against any employee or applicant for employment because of race, creed, color, sex, national origin, sexual orientation, age, disability, genetic predisposition or carrier status, or marital status. Furthermore, in accordance with Section 220-e of the Labor Law, if this is a contract for the construction, alteration or repair of any public building or public work or for the manufacture, sale or distribution of materials, equipment or supplies, and to the extent that this contract shall be performed within the State of New York, Contractor agrees that neither it nor its subcontractors shall, by reason of race, creed, color, disability, sex, or national origin: (a) discriminate in hiring against any New York State citizen who is qualified and available to perform the work; or (b) discriminate against or intimidate any employee hired for the performance of work under this contract. If this is a building service contract as defined in Section 230 of the Labor Law, then, in accordance with Section 239 thereof, Contractor agrees that neither it nor its subcontractors shall by reason of race, creed, color, national origin, age, sex or disability: (a) discriminate in hiring against any New York State citizen who is qualified and available to perform the work; or (b) discriminate against or intimidate any employee hired for the performance of work under this contract. Contractor is subject to fines of $50.00 per person per day for any violation of Section 220-e or Section 239 as well as possible termination of this contract and forfeiture of all moneys due hereunder for a second or subsequent violation.

6. WAGE AND HOURS PROVISIONS. If this is a public work contract covered by Article 8 of the Labor Law or a building service contract covered by Article 9 thereof, neither Contractor's employees nor the employees of its subcontractors may be required or permitted to work more than the number of hours or days stated in said statutes, except as otherwise provided in the Labor Law and as set forth in prevailing wage and supplement schedules issued by the State Labor Department. Furthermore, Contractor and its subcontractors must pay at least the prevailing wage rate and pay or provide the prevailing supplements, including the premium rates for overtime pay, as determined by the State Labor Department in accordance with the Labor Law. Additionally, effective April 28, 2008, if this is a public work contract covered by Article 8 of the Labor Law, the Contractor understands and agrees that the filing of payrolls in a manner consistent with Subdivision 3-a of Section 220 of the Labor Law shall be a condition precedent to payment by the State of

any State approved sums due and owing for work done upon the project.

7. NON-COLLUSIVE BIDDING CERTIFICATION. In accordance with Section 139-d of the State Finance Law, if this contract was awarded based upon the submission of bids, Contractor affirms, under penalty of perjury, that its bid was arrived at independently and without collusion aimed at restricting competition. Contractor further affirms that, at the time Contractor submitted its bid, an authorized and responsible person executed and delivered to the State a non-collusive bidding certification on Contractor's behalf.

8. INTERNATIONAL BOYCOTT PROHIBITION. In accordance with Section 220-f of the Labor Law and Section 139-h of the State Finance Law, if this contract exceeds $5,000, the Contractor agrees, as a material condition of the contract, that neither the Contractor nor any substantially owned or affiliated person, firm, partnership or corporation has participated, is participating, or shall participate in an international boycott in violation of the federal Export Administration Act of 1979 (50 USC App. Sections 2401 et seq.) or regulations thereunder. If such Contractor, or any of the aforesaid affiliates of Contractor, is convicted or is otherwise found to have violated said laws or regulations upon the final determination of the United States Commerce Department or any other appropriate agency of the United States subsequent to the contract's execution, such contract, amendment or modification thereto shall be rendered forfeit and void. The Contractor shall so notify the State Comptroller within five (5) business days of such conviction, determination or disposition of appeal (2NYCRR 105.4).

9. SET-OFF RIGHTS. The State shall have all of its common law, equitable and statutory rights of set-off. These rights shall include, but not be limited to, the State's option to withhold for the purposes of set-off any moneys due to the Contractor under this contract up to any amounts due and owing to the State with regard to this contract, any other contract with any State department or agency, including any contract for a term commencing prior to the term of this contract, plus any amounts due and owing to the State for any other reason including, without limitation, tax delinquencies, fee delinquencies or monetary penalties relative thereto. The State shall exercise its set-off rights in accordance with normal State practices including, in cases of set-off pursuant to an audit, the finalization of such audit by the State agency, its representatives, or the State Comptroller.

10. RECORDS. The Contractor shall establish and maintain complete and accurate books, records, documents, accounts and other evidence directly pertinent to performance under this contract (hereinafter, collectively, "the Records"). The Records must be kept for the balance of the calendar year in which they were made and for six (6) additional years thereafter. The State Comptroller, the Attorney General and any other person or entity authorized to conduct an examination, as well as the agency or agencies involved in this contract, shall have access to the Records during normal business hours at an office of the Contractor within the State of New York or, if no such office is available, at a mutually agreeable and reasonable venue within the State, for the term specified above for the purposes of inspection, auditing and copying. The State shall take reasonable steps to protect from public disclosure any of the Records which are exempt from disclosure under Section 87 of the Public Officers Law (the "Statute") provided that: (i) the Contractor shall timely inform an appropriate State official, in writing, that said records should not be disclosed; and (ii) said records shall be sufficiently identified; and (iii) designation of said records as exempt under the Statute is reasonable. Nothing contained herein shall diminish, or in any way adversely affect, the State's right to discovery in any pending or future litigation.

11. IDENTIFYING INFORMATION AND PRIVACY NOTIFICATION. (a) Identification Number(s). Every invoice or New York State Claim for Payment submitted to a New York State agency by a payee, for payment for the sale of goods or services or for transactions (e.g., leases, easements, licenses, etc.) related to real or personal property must include the payee's identification number. The number is any or all of the following: (i) the payee's Federal employer identification number, (ii) the payee's Federal social security number, and/or (iii) the payee's Vendor Identification Number assigned by the Statewide Financial System. Failure to include such number or numbers may delay payment. Where the payee does not have such number or numbers, the payee, on its invoice or Claim for Payment, must give the reason or reasons why the payee does not have such number or numbers.

(b) Privacy Notification. (1) The authority to request the above personal information from a seller of goods or services or a lessor of real or personal property, and the authority to maintain such information, is found in Section 5 of the State Tax Law. Disclosure of this information by the seller or lessor to the State is mandatory. The principal purpose for which the information is collected is to enable the State to identify individuals, businesses and others who have been delinquent in filing tax returns or may have understated their tax liabilities and to generally identify persons affected by the taxes administered by the Commissioner of Taxation and Finance. The information will be used for tax administration purposes and for any other purpose authorized by law. (2) The personal information is requested by the purchasing unit of the agency contracting to purchase the goods or services or lease the real or personal property covered by this contract or lease. The information is maintained in the Statewide Financial System by the Vendor Management Unit within the Bureau of State Expenditures, Office of the State Comptroller, 110 State Street, Albany, New York 12236.

12. EQUAL EMPLOYMENT OPPORTUNITIES FOR MINORITIES AND WOMEN. In accordance with Section 312 of the Executive Law and 5 NYCRR 143, if this contract is: (i) a written agreement or purchase order instrument, providing for a total expenditure in excess of $25,000.00,

whereby a contracting agency is committed to expend or does expend funds in return for labor, services, supplies, equipment, materials or any combination of the foregoing, to be performed for, or rendered or furnished to the contracting agency; or (ii) a written agreement in excess of $100,000.00 whereby a contracting agency is committed to expend or does expend funds for the acquisition, construction, demolition, replacement, major repair or renovation of real property and improvements thereon; or (iii) a written agreement in excess of $100,000.00 whereby the owner of a State assisted housing project is committed to expend or does expend funds for the acquisition, construction, demolition, replacement, major repair or renovation of real property and improvements thereon for such project, then the following shall apply and by signing this agreement the Contractor certifies and affirms that it is Contractor's equal employment opportunity policy that:

(a) The Contractor will not discriminate against employees or applicants for employment because of race, creed, color, national origin, sex, age, disability or marital status, shall make and document its conscientious and active efforts to employ and utilize minority group members and women in its work force on State contracts and will undertake or continue existing programs of affirmative action to ensure that minority group members and women are afforded equal employment opportunities without discrimination. Affirmative action shall mean recruitment, employment, job assignment, promotion, upgradings, demotion, transfer, layoff, or termination and rates of pay or other forms of compensation;

(b) at the request of the contracting agency, the Contractor shall request each employment agency, labor union, or authorized representative of workers with which it has a collective bargaining or other agreement or understanding, to furnish a written statement that such employment agency, labor union or representative will not discriminate on the basis of race, creed, color, national origin, sex, age, disability or marital status and that such union or representative will affirmatively cooperate in the implementation of the Contractor's obligations herein; and

(c) the Contractor shall state, in all solicitations or advertisements for employees, that, in the performance of the State contract, all qualified applicants will be afforded equal employment opportunities without discrimination because of race, creed, color, national origin, sex, age, disability or marital status.

Contractor will include the provisions of "a", "b", and "c" above, in every subcontract over $25,000.00 for the construction, demolition, replacement, major repair, renovation, planning or design of real property and improvements thereon (the "Work") except where the Work is for the beneficial use of the Contractor. Section 312 does not apply to: (i) work, goods or services unrelated to this contract; or (ii) employment outside New York State. The State shall consider compliance by a contractor or subcontractor with the requirements of any federal law concerning equal employment opportunity which effectuates the purpose of this section. The contracting agency shall determine whether the imposition of the requirements of the provisions hereof duplicate or conflict with any such federal law and if such duplication or conflict exists, the contracting agency shall waive the applicability of Section 312 to the extent of such duplication or conflict. Contractor will comply with all duly promulgated and lawful rules and regulations of the Department of Economic Development's Division of Minority and Women's Business Development pertaining hereto.

13. <u>CONFLICTING TERMS</u>. In the event of a conflict between the terms of the contract (including any and all attachments thereto and amendments thereof) and the terms of this Appendix A, the terms of this Appendix A shall control.

14. <u>GOVERNING LAW</u>. This contract shall be governed by the laws of the State of New York except where the Federal supremacy clause requires otherwise.

15. <u>LATE PAYMENT</u>. Timeliness of payment and any interest to be paid to Contractor for late payment shall be governed by Article 11-A of the State Finance Law to the extent required by law.

16. <u>NO ARBITRATION</u>. Disputes involving this contract, including the breach or alleged breach thereof, may not be submitted to binding arbitration (except where statutorily authorized), but must, instead, be heard in a court of competent jurisdiction of the State of New York.

17. <u>SERVICE OF PROCESS</u>. In addition to the methods of service allowed by the State Civil Practice Law & Rules ("CPLR"), Contractor hereby consents to service of process upon it by registered or certified mail, return receipt requested. Service hereunder shall be complete upon Contractor's actual receipt of process or upon the State's receipt of the return thereof by the United States Postal Service as refused or undeliverable. Contractor must promptly notify the State, in writing, of each and every change of address to which service of process can be made. Service by the State to the last known address shall be sufficient. Contractor will have thirty (30) calendar days after service hereunder is complete in which to respond.

18. <u>PROHIBITION ON PURCHASE OF TROPICAL HARDWOODS</u>. The Contractor certifies and warrants that all wood products to be used under this contract award will be in accordance with, but not limited to, the specifications and provisions of Section 165 of the State Finance Law, (Use of Tropical Hardwoods) which prohibits purchase and use of tropical hardwoods, unless specifically exempted, by the State or any governmental agency or political subdivision or public benefit corporation. Qualification for an exemption under this law will be the responsibility of the contractor to establish to meet with the approval of the State.

In addition, when any portion of this contract involving the use of woods, whether supply or installation, is to be performed by any subcontractor, the prime Contractor will indicate and certify in the submitted bid proposal that the subcontractor has been informed and is in compliance with specifications and provisions regarding use of tropical hardwoods as detailed in §165 State Finance Law. Any such use must meet with the approval of the State; otherwise, the bid may not be considered responsive. Under bidder certifications, proof of qualification for exemption will be the responsibility of the Contractor to meet with the approval of the State.

19. MACBRIDE FAIR EMPLOYMENT PRINCIPLES. In accordance with the MacBride Fair Employment Principles (Chapter 807 of the Laws of 1992), the Contractor hereby stipulates that the Contractor either (a) has no business operations in Northern Ireland, or (b) shall take lawful steps in good faith to conduct any business operations in Northern Ireland in accordance with the MacBride Fair Employment Principles (as described in Section 165 of the New York State Finance Law), and shall permit independent monitoring of compliance with such principles.

20. OMNIBUS PROCUREMENT ACT OF 1992. It is the policy of New York State to maximize opportunities for the participation of New York State business enterprises, including minority and women-owned business enterprises as bidders, subcontractors and suppliers on its procurement contracts.

Information on the availability of New York State subcontractors and suppliers is available from:

NYS Department of Economic Development
Division for Small Business
Albany, New York 12245
Telephone: 518-292-5100
Fax: 518-292-5884
email: opa@esd.ny.gov

A directory of certified minority and women-owned business enterprises is available from:

NYS Department of Economic Development
Division of Minority and Women's Business Development
633 Third Avenue
New York, NY 10017
212-803-2414
email: mwbecertification@esd.ny.gov
http://esd.ny.gov/MWBE/directorySearch.html

The Omnibus Procurement Act of 1992 requires that by signing this bid proposal or contract, as applicable, Contractors certify that whenever the total bid amount is greater than $1 million:

(a) The Contractor has made reasonable efforts to encourage the participation of New York State Business Enterprises as suppliers and subcontractors, including certified minority and women-owned business enterprises, on this project, and has retained the documentation of these efforts to be provided upon request to the State;

(b) The Contractor has complied with the Federal Equal Opportunity Act of 1972 (P.L. 92-261), as amended;

(c) The Contractor agrees to make reasonable efforts to provide notification to New York State residents of employment opportunities on this project through listing any such positions with the Job Service Division of the New York State Department of Labor, or providing such notification in such manner as is consistent with existing collective bargaining contracts or agreements. The Contractor agrees to document these efforts and to provide said documentation to the State upon request; and

(d) The Contractor acknowledges notice that the State may seek to obtain offset credits from foreign countries as a result of this contract and agrees to cooperate with the State in these efforts.

21. RECIPROCITY AND SANCTIONS PROVISIONS. Bidders are hereby notified that if their principal place of business is located in a country, nation, province, state or political subdivision that penalizes New York State vendors, and if the goods or services they offer will be substantially produced or performed outside New York State, the Omnibus Procurement Act 1994 and 2000 amendments (Chapter 684 and Chapter 383, respectively) require that they be denied contracts which they would otherwise obtain. NOTE: As of May 15, 2002, the list of discriminatory jurisdictions subject to this provision includes the states of South Carolina, Alaska, West Virginia, Wyoming, Louisiana and Hawaii. Contact NYS Department of Economic Development for a current list of jurisdictions subject to this provision.

22. COMPLIANCE WITH NEW YORK STATE INFORMATION SECURITY BREACH AND NOTIFICATION ACT. Contractor shall comply with the provisions of the New York State Information Security Breach and Notification Act (General Business Law Section 899-aa; State Technology Law Section 208).

23. COMPLIANCE WITH CONSULTANT DISCLOSURE LAW. If this is a contract for consulting services, defined for purposes of this requirement to include analysis, evaluation, research, training, data processing, computer programming, engineering, environmental, health, and mental health services, accounting, auditing, paralegal, legal or similar services, then, in accordance with Section 163 (4-g) of the State Finance Law (as amended by Chapter 10 of the Laws of 2006), the Contractor shall timely, accurately and properly comply with the requirement to submit an annual employment report for the contract to the agency that awarded

the contract, the Department of Civil Service and the State Comptroller.

24. PROCUREMENT LOBBYING. To the extent this agreement is a "procurement contract" as defined by State Finance Law Sections 139-j and 139-k, by signing this agreement the contractor certifies and affirms that all disclosures made in accordance with State Finance Law Sections 139-j and 139-k are complete, true and accurate. In the event such certification is found to be intentionally false or intentionally incomplete, the State may terminate the agreement by providing written notification to the Contractor in accordance with the terms of the agreement.

25. CERTIFICATION OF REGISTRATION TO COLLECT SALES AND COMPENSATING USE TAX BY CERTAIN STATE CONTRACTORS, AFFILIATES AND SUBCONTRACTORS.
To the extent this agreement is a contract as defined by Tax Law Section 5-a, if the contractor fails to make the certification required by Tax Law Section 5-a or if during the term of the contract, the Department of Taxation and Finance or the covered agency, as defined by Tax Law 5-a, discovers that the certification, made under penalty of perjury, is false, then such failure to file or false certification shall be a material breach of this contract and this contract may be terminated, by providing written notification to the Contractor in accordance with the terms of the agreement, if the covered agency determines that such action is in the best interest of the State.

APPENDIX B

GENERAL SPECIFICATIONS

PLEASE RETAIN THIS DOCUMENT FOR FUTURE REFERENCE

TABLE OF CONTENTS

GENERAL		PAGE
1.	Applicability	1
2.	Governing Law	1
3.	Ethics Compliance	1
4.	Conflict of Terms	1
5.	Definitions	1-3
BID SUBMISSION		
6.	International Bidding	3
7.	Bid Opening	3
8.	Bid Submission	3
9.	Facsimile Submissions	3
10.	Authentication of Facsimile Bids	4
11.	Late Bids	4
12.	Bid Contents	4
13.	Extraneous Terms	4
14.	Confidential/Trade Secret Materials	4
15.	Release of Bid Evaluation Materials	4
16.	Freedom of Information Law	5
17.	Prevailing Wage Rates - Public Works and Building Services Contracts	5
18.	Taxes	6
19.	Expenses Prior to Contract Execution	6
20.	Advertising Results	6
21.	Product References	6
22.	Remanufactured, Recycled, Recyclable Or Recovered Materials	6
23.	Products Manufactured in Public Institutions	6
24.	Pricing	6
25.	Drawings	7
26.	Site Inspection	7
27.	Procurement Card	7
28.	Samples	7
BID EVALUATION		
29.	Bid Evaluation	8
30.	Conditional Bid	8
31.	Clarification/Revisions	8
32.	Prompt Payment Discounts	8
33.	Equivalent or Identical Bids	8
34.	Performance and Responsibility Qualifications	8
35.	Disqualification for Past Performance	8
36.	Quantity Changes Prior To Award	8
37.	Timeframe for Offers	8
TERMS & CONDITIONS		
38.	Contract Creation/Execution	8
39.	Participation in Centralized Contracts	8
40.	Modification of Contract Terms	9
41.	Scope Changes	9
42.	Estimated/Specific Quantity Contracts	9

TERMS & CONDITIONS		PAGE
43.	Emergency Contracts	9
44.	Purchase Orders	9
45.	Product Delivery	10
46.	Weekend and Holiday Deliveries	10
47.	Shipping/Receipt of Product	10
48.	Title and Risk of Loss	10
49.	Re-Weighing Product	10
50.	Product Substitution	10
51.	Rejected Product	10
52.	Installation	10
53.	Repaired or Replaced Product/ Components	11
54.	On-Site Storage	11
55.	Employees/Subcontractors/Agents	11
56.	Assignment	11
57.	Subcontractors and Suppliers	11
58.	Performance/Bid Bond	11
59.	Suspension of Work	11
60.	Termination	11
61.	Savings/Force Majeure	12
62.	Contract Billings	12
63.	Default - Authorized User	12
64.	Interest on Late Payments	12
65.	Remedies for Breach	13
66.	Assignment of Claim	13
67.	Toxic Substances	13
68.	Independent Contractor	13
69.	Security	13
70.	Cooperation with Third Parties	13
71.	Contract Term - Renewal	13
72.	Additional Warranties	13
73.	Legal Compliance	15
74.	Indemnification	15
75.	Indemnification Relating to Third Party Rights	15
76.	Limitation of Liability	15
77.	Insurance	15
THE FOLLOWING CLAUSES PERTAIN TO TECHNOLOGY & NEGOTIATED CONTRACTS		
78.	Software License Grant	15
79.	Product Acceptance	17
80.	Audit of Licensed Product Usage	17
81.	Ownership/Title to Project Deliverables	17
82.	Proof of License	18
83.	Product Version	18
84.	Changes to Product or Service Offerings	18
85.	No Hardstop/Passive License Monitoring	19
86.	Source Code Escrow for Licensed Product	19

GENERAL

1. **APPLICABILITY** The terms and conditions set forth in this Appendix B are expressly incorporated in and applicable to the resulting procurement contracts let by the Office of General Services Procurement Services Group, or let by any other Authorized User where incorporated by reference in its Bid Documents. Captions are intended as descriptive and are not intended to limit or otherwise restrict the terms and conditions set forth herein.

2. **GOVERNING LAW** This procurement, the resulting contract and any purchase orders issued hereunder shall be governed by the laws of the State of New York except where the Federal supremacy clause requires otherwise, and actions or proceedings arising from the contract shall be heard in a court of competent jurisdiction in the State of New York.

3. **ETHICS COMPLIANCE** All Bidders/Contractors and their employees must comply with the requirements of Sections 73 and 74 of the Public Officers Law, other State codes, rules, regulations and executive orders establishing ethical standards for the conduct of business with New York State. In signing the Bid, Bidder certifies full compliance with those provisions for any present or future dealings, transactions, sales, contracts, services, offers, relationships, etc., involving New York State and/or its employees. Failure to comply with those provisions may result in disqualification from the Bidding process, termination of contract, and/or other civil or criminal proceedings as required by law.

4. **CONFLICT OF TERMS** Unless otherwise set forth in the procurement or contract documents, conflicts among documents shall be resolved in the following order of precedence:

a. **Appendix A** (Standard Clauses for NYS Contracts)

b. **Mini-Bid Project Definition** if applicable and in accordance with the terms and conditions of the Back-Drop Contract.

c. **Contract and other writing(s)** setting forth the final agreements, clarifications and terms between the Bid Documents and Contractor's Bid. In the latter circumstance, clarifications must specifically note in writing what was offered by the Contractor and what was accepted by the State. If not, such clarifications shall be considered last in the order of precedence under this paragraph.

d. **Bid Documents** (Other than Appendix A).

i. Bid Specifications prepared by the Authorized User.

ii. Appendix B (General Specifications).

iii. Incorporated Contract Appendices, if any, following the order of precedence as stated for Contract above.

e. **Contractor's Bid or Mini-Bid Proposal**.

f. **Unincorporated Appendices** (if any).

5. DEFINITIONS Terms used in this Appendix B shall have the following meanings:

AFFILIATE Any individual or other legal entity, (including but not limited to sole proprietor, partnership, limited liability company, firm or corporation) that effectively controls another company in which (a) the Bidder owns more than 50% of the ownership; or (b) any individual or other legal entity which owns more than 50% of the ownership of the Bidder. In addition, if a Bidder owns less than 50% of the ownership of another legal entity, but directs or has the right to direct such entity's daily operations, that entity will be an Affiliate.

AGENCY OR AGENCIES The State of New York, acting by or through one or more departments, boards, commissions, offices or institutions of the State of New York.

ATTORNEY GENERAL Attorney General of the State of New York.

AUTHORIZED USER(S) Agencies, or any other entity authorized by the laws of the State of New York to participate in NYS centralized contracts (including but not limited to political subdivisions, public authorities, public benefit corporations and certain other entities set forth in law), or the State of New York acting on behalf of one or more such Agencies or other entities, provided that each such Agency or other entity shall be held solely responsible for liabilities or payments due as a result of its participation.

BID OR BID PROPOSAL An offer or proposal submitted by a Bidder to furnish a described product or a solution, perform services or means of achieving a practical end, at a stated price for the stated Contract term. As required by the Bid Documents, the Bid or proposal may be subject to modification through the solicitation by the Agency of best and final offers during the evaluation process prior to recommendation for award of the Contract.

BIDDER/OFFERER Any individual or other legal entity (including but not limited to sole proprietor, partnership, limited liability company, firm or corporation) which submits a Bid in response to a Bid Solicitation. The term Bidder shall also include the term "offeror." In the case of negotiated Contracts, "Bidder" shall refer to the "Contractor."

BID DOCUMENTS Writings by the State setting forth the scope, terms, conditions and technical specifications for a procurement of Product. Such writings typically include, but are not limited to: Invitation for Bids (IFB), Request for Quotation (RFQ), Request for Proposals (RFP), addenda or amendments thereto, and terms and conditions which are incorporated by reference, including but not limited to, Appendix A (Standard Clauses for NYS Contracts), Appendix B, (General Specifications). Where these General Specifications are incorporated in negotiated Contracts that have not been competitively Bid, the term "Bid Documents" shall be deemed to refer to the terms and conditions set forth in the negotiated Contract and associated documentation.

BID SPECIFICATION A written description drafted by the Authorized User setting forth the specific terms of the intended procurement, which may include: physical or functional characteristics, the nature of a commodity or construction item, any description of the work to be performed, Products to be provided, the necessary qualifications of the Bidder, the capacity and capability of the Bidder to successfully carry out the proposed Contract, or the process for achieving specific results and/or anticipated outcomes or any other requirement necessary to perform work. Where these General Specifications are incorporated in negotiated Contracts that have not been competitively Bid, the term "Bid Specifications" shall be deemed to refer to the terms and conditions set forth in the negotiated Contract and associated documentation.

COMMISSIONER Commissioner of OGS, or in the case of Bid Specifications issued by an Authorized User, the head of such Authorized User or their authorized representative.

COMPTROLLER Comptroller of the State of New York.

CONTRACT The writing(s) which contain the agreement of the Commissioner and the Bidder/Contractor setting forth the total legal obligation between the parties as determined by applicable rules of law, and which most typically include the following classifications of public procurements:

a. Agency Specific Contracts Contracts where the specifications for a Product or a particular scope of work are described and defined to meet the needs of one or more Authorized User(s).

b. Centralized Contracts Single or multiple award Contracts where the specifications for a Product or general scope of work are described and defined by the Office of General Services to meet the needs of Authorized Users. Centralized Contracts may be awarded through multiple awards or through adoption of another jurisdiction's contract or on a sole source, single source, emergency or competitive basis. Once established, procurements may be made from the selected Contractor(s) without further competition or Mini-Bid unless otherwise required by the Bid Specifications or Contract Award Notification.

c. Back-Drop Contracts Multiple award Centralized Contracts where the Office of General Services defines the specifications for a Product or general scope of work to meet the needs of Authorized Users. Bids may be submitted either at a date and time certain or may be accepted on a continuous or periodic recruitment basis, as set forth in the Bid Specifications. Selection of a Contractor(s) from among Back-Drop contract holders for an actual Product, project or particular scope of work may subsequently be made on a single or sole source basis, or on the basis of a Mini-Bid among qualified Back-Drop contract holders, or such other method as set forth in the Bid Document.

d. Piggyback Contract A Contract let by any department, agency or instrumentality of the United States government, or any department, agency, office, political subdivision or instrumentality of any state or state(s) which is adopted and extended for use by the OGS Commissioner in accordance with the requirements of the State Finance Law.

e. Contract Letter A letter to the successful Bidder(s) indicating acceptance of its Bid in response to a solicitation. Unless otherwise specified, the issuance of a Letter of Acceptance forms a Contract but is not an order for Product, and Contractor should not take any action with respect to actual Contract deliveries except on the basis of Purchase Orders sent from Authorized User(s).

CONTRACT AWARD NOTIFICATION An announcement to Authorized Users that a Contract has been established.

CONTRACTOR Any successful Bidder(s) to whom a Contract has been awarded by the Commissioner.

DOCUMENTATION The complete set of manuals (e.g., user, installation, instruction or diagnostic manuals) in either hard or electronic copy, which are necessary to enable an Authorized User to properly test, install, operate and enjoy full use of the Product.

EMERGENCY An urgent and unexpected requirement where health and public safety or the conservation of public resources is at risk.

ENTERPRISE The total business operations in the United States of Authorized User (s) without regard to geographic location where such operations are performed or the entity actually performing such operations on behalf of Authorized User.

ENTERPRISE LICENSE A license grant of unlimited rights to deploy, access, use and execute Product anywhere within the Enterprise up to the maximum capacity stated on the Purchase Order or in the Contract.

ERROR CORRECTIONS Machine executable software code furnished by Contractor which corrects the Product so as to conform to the applicable warranties, performance standards and/or obligations of the Contractor.

GROUP A classification of Product, services or technology which is designated by OGS.

INVITATION FOR BIDS (**IFB**) A type of Bid Document which is most typically used where requirements can be stated and award will be made based on lowest price to the responsive and responsible Bidder(s).

LICENSED SOFTWARE Software transferred upon the terms and conditions set forth in the Contract. "Licensed Software" includes error corrections, upgrades, enhancements or new releases, and any deliverables due under a maintenance or service contract (e.g., patches, fixes, PTFs, programs, code or data conversion, or custom programming).

LICENSEE One or more Authorized Users who acquire Product from Contractor by issuing a Purchase Order in accordance with the terms and conditions of the Contract; provided that, for purposes of compliance with an individual license, the term "Licensee" shall be deemed to refer separately to the individual Authorized User(s) who took receipt of and who is executing the Product, and who shall be solely responsible for performance and liabilities incurred. In the case of acquisitions by State Agencies, the Licensee shall be the State of New York.

LICENSE EFFECTIVE DATE The date Product is delivered to an Authorized User. Where a License involves Licensee's right to copy a previously licensed and delivered Master Copy of a Program, the license effective date for additional copies shall be deemed to be the date on which the Purchase Order is executed.

LICENSOR A Contractor who transfers rights in proprietary Product to Authorized Users in accordance with the rights and obligations specified in the Contract.

MINI-BID PROJECT DEFINITION A Bid Document containing project specific Bid Specifications developed by or for an Authorized User which solicits Bids from Contractors previously qualified under a Back-Drop Contract.

MULTIPLE AWARD A determination and award of a Contract in the discretion of the Commissioner to more than one responsive and responsible Bidder who meets the requirements of a specification, where the multiple award is made on the grounds set forth in the Bid Document in order to satisfy multiple factors and needs of Authorized Users (e.g., complexity of items, various manufacturers, differences in performance required to accomplish or produce required end results, production and distribution facilities, price, compliance with delivery requirements, geographic location or other pertinent factors).

NEW PRODUCT RELEASES (Product Revisions) Any commercially released revisions to the licensed version of a Product as may be generally offered and available to Authorized Users. New releases involve a substantial revision of functionality from a previously released version of the Product.

OGS The New York State Office of General Services.

PROCUREMENT RECORD Documentation by the Authorized User of the decisions made and approach taken during the procurement process and during the contract term.

PRODUCT A deliverable under any Bid or Contract which may include commodities, services and/or technology. The term "Product" includes Licensed Software.

PROPRIETARY Protected by secrecy, patent, copyright or trademark against commercial competition.

PURCHASE ORDER The Authorized User's fiscal form or format that is used when making a purchase (e.g., formal written Purchase Order, Procurement Card, electronic Purchase Order, or other authorized instrument).

REQUEST FOR PROPOSALS (RFP) A type of Bid Document that is used for procurements where factors in addition to cost are considered and weighted in awarding the contract and where the method of award is "best value," as defined by the State Finance Law.

REQUEST FOR QUOTATION (RFQ) A type of Bid Document that can be used when a formal Bid opening is not required (e.g., discretionary, sole source, single source or emergency purchases).

RESPONSIBLE BIDDER A Bidder that is determined to have financial and organizational capacity, legal authority, satisfactory previous performance, skill, judgment and integrity, and that is found to be competent, reliable and experienced, as determined by the Commissioner. For purposes of being deemed responsible, a Bidder must also be determined to be in compliance with Sections 139-j and 139-k of the State Finance Law relative to restrictions on contacts during the procurement process and disclosure of contacts and prior findings of non-responsibility under these statutes.

RESPONSIVE BIDDER A Bidder meeting the specifications or requirements prescribed in the Bid Document or solicitation, as determined by the OGS Commissioner.

SINGLE SOURCE A procurement where two or more Bidders can supply the required Product, and the Commissioner may award the contract to one Bidder over the other.

SITE The location (street address) where Product will be executed or services delivered.

SOLE SOURCE A procurement where only one Bidder is capable of supplying the required Product.

SOURCE CODE The programming statements or instructions written and expressed in any language understandable by a human being skilled in the art which are translated by a language compiler to produce executable machine Object Code.

STATE State of New York.

SUBCONTRACTOR Any individual or other legal entity, (including but not limited to sole proprietor, partnership, limited liability company, firm or corporation) who has entered into a contract, express or implied, for the performance of a portion of a Contract with a Contractor.

TERMS OF LICENSE The terms and conditions set forth in the Contract that are in effect and applicable to a Purchase Order at the time of order placement.

VIRUS Any computer code, whether or not written or conceived by Contractor, that disrupts, disables, harms, or otherwise impedes in any manner the operation of the Product, or any other associated software, firmware, hardware, or computer system (such as local area or wide-area networks), including aesthetic disruptions or distortions, but does not include security keys or other such devices installed by Product manufacturer.

BID SUBMISSION

6. INTERNATIONAL BIDDING All offers (tenders), and all information and Product required by the solicitation or provided as explanation thereof, shall be submitted in English. All prices shall be expressed, and all payments shall be made, in United States Dollars ($US). Any offers (tenders) submitted which do not meet the above criteria will be rejected.

7. BID OPENING Bids may, as applicable, be opened publicly. The Commissioner reserves the right at any time to postpone or cancel a scheduled Bid opening.

8. BID SUBMISSION All Bids are to be packaged, sealed and submitted to the location stated in the Bid Specifications. Bidders are solely responsible for timely delivery of their Bids to the location set forth in the Bid Specifications prior to the stated Bid opening date/time.

A Bid return envelope, if provided with the Bid Specifications, should be used with the Bid sealed inside. If the Bid response does not fit into the envelope, the Bid envelope should be attached to the outside of the sealed box or package with the Bid inside. If using a commercial delivery company that requires use of their shipping package or envelope, Bidder's sealed Bid, labeled as detailed below, should be placed within the shipper's sealed envelope to ensure that the Bid is not prematurely opened.

All Bids must have a label on the outside of the package or shipping container outlining the following information:

"**BID ENCLOSED** (bold print, all capitals)

- Group Number
- IFB or RFP Number
- Bid Submission date and time"

In the event that a Bidder fails to provide such information on the return Bid envelope or shipping material, the receiving entity reserves the right to open the shipping package or envelope to determine the proper Bid number or Product group, and the date and time of Bid opening. Bidder shall have no claim against the receiving entity arising from such opening and such opening shall not affect the validity of the Bid or the procurement.

Notwithstanding the receiving agency's right to open a Bid to ascertain the foregoing information, Bidder assumes all risk of late delivery associated with the Bid not being identified, packaged or labeled in accordance with the foregoing requirements.

All Bids must be signed by a person authorized to commit the Bidder to the terms of the Bid Documents and the content of the Bid (offer).

9. FACSIMILE SUBMISSIONS Unless specifically prohibited by the terms of the Bid Specifications, facsimile Bids may be SUBMITTED AT THE SOLE OPTION AND RISK OF THE BIDDER. Only the FAX number(s) indicated in the Bid Specifications may be used. Access to the facsimile machine(s) is on a "first come, first serve" basis, and the Commissioner bears no liability or responsibility and makes no guarantee whatsoever with respect to

the Bidder's access to such equipment at any specific time. Bidders are solely responsible for submission and receipt of the entire facsimile Bid by the Authorized User prior to Bid opening and must include on the first page of the transmission the total number of pages transmitted in the facsimile, including the cover page. Incomplete, ambiguous or unreadable transmissions in whole or in part may be rejected at the sole discretion of the Commissioner. Facsimile Bids are fully governed by all conditions outlined in the Bid Documents and must be submitted on forms or in the format required in the Bid Specifications, including the executed signature page and acknowledgment.

10. AUTHENTICATION OF FACSIMILE BIDS The act of submitting a Bid by facsimile transmission, including an executed signature page or as otherwise specified in the Bid Documents, shall be deemed a confirming act by Bidder which authenticates the signing of the Bid.

11. LATE BIDS For purposes of Bid openings held and conducted by OGS, a Bid must be received in such place as may be designated in the Bid Documents or if no place is specified in the OGS Mailroom located in the Empire State Plaza, Albany, New York 12242, at or before the date and time established in the Bid Specifications for the Bid opening. For purposes of Bid openings held and conducted by Authorized Users other than OGS, the term late Bid is defined as a Bid not received in the location established in the Bid Specifications at or before the date and time specified for the Bid opening.

Any Bid received at the specified location after the time specified will be considered a late Bid. A late Bid shall not be considered for award unless: (i) no timely Bids meeting the requirements of the Bid Documents are received or, (ii) in the case of a multiple award, an insufficient number of timely Bids were received to satisfy the multiple award; and acceptance of the late Bid is in the best interests of the Authorized Users. Bids submitted for continuous or periodic recruitment contract awards must meet the submission requirements associated with their specifications. Delays in United States mail deliveries or any other means of transmittal, including couriers or agents of the Authorized User shall not excuse late Bid submissions. Similar types of delays, including but not limited to, bad weather, or security procedures for parking and building admittance shall not excuse late Bid submissions. Determinations relative to Bid timeliness shall be at the sole discretion of the Commissioner.

12. BID CONTENTS Bids must be complete and legible. All Bids must be signed. All information required by the Bid Specifications must be supplied by the Bidder on the forms or in the format specified. No alteration, erasure or addition is to be made to the Bid Documents. Changes may be ignored by the Commissioner or may be grounds for rejection of the Bid. Changes, corrections and/or use of white-out in the Bid or Bidder's response portion of the Bid Document must be initialed by an authorized representative of the Bidder. Bidders are cautioned to verify their Bids before submission, as amendments to Bids or requests for withdrawal of Bids received by the Commissioner after the time specified for the Bid opening, may not be considered.

13. EXTRANEOUS TERMS Bids must conform to the terms set forth in the Bid Documents, as extraneous terms or material deviations (including additional, inconsistent, conflicting or alternative terms) may render the Bid non-responsive and may result in rejection of the Bid.

Extraneous term(s) submitted on standard, pre-printed forms (including but not limited to: product literature, order forms, license agreements, contracts or other documents) that are attached or referenced with submissions shall not be considered part of the Bid or resulting Contract, but shall be deemed included for informational or promotional purposes only.

Only those extraneous terms that meet all the following requirements may be considered as having been submitted as part of the Bid:

a. Each proposed extraneous term (addition, deletion, counter-offer, deviation, or modification) must be specifically enumerated in a writing which is not part of a pre-printed form; and

b. The writing must identify the particular specification requirement (if any) that Bidder rejects or proposes to modify by inclusion of the extraneous term; and

c. The Bidder shall enumerate the proposed addition, counter offer, modification or deviation from the Bid Document, and the reasons therefore.

No extraneous term(s), whether or not deemed "material," shall be incorporated into a Contract or Purchase Order unless submitted in accordance with the above and the Commissioner or Authorized User expressly accepts each such term(s) in writing. Acceptance and/or processing of the Bid shall not constitute such written acceptance of Extraneous Term(s).

14. CONFIDENTIAL/TRADE SECRET MATERIALS

a. Contractor Confidential, trade secret or proprietary materials as defined by the laws of the State of New York must be clearly marked and identified as such upon submission by the Bidder. Marking the Bid as "confidential" or "proprietary" on its face or in the document header or footer shall not be considered by the Commissioner or Authorized User to be sufficient without specific justification as to why disclosure of particular information in the Bid would cause substantial injury to the competitive position of the Bidder. Bidders/Contractors intending to seek an exemption from disclosure of these materials under the Freedom of Information Law must request the exemption in writing, setting forth the reasons for the claimed exemption. Acceptance of the claimed materials does not constitute a determination on the exemption request, which determination will be made in accordance with statutory procedures. Properly identified information that has been designated confidential, trade secret, or proprietary by the Bidder will not be disclosed except as may be required by the Freedom of Information Law or other applicable State and federal laws.

b. Commissioner or Authorized User Contractor further warrants, covenants and represents that any confidential information obtained by Contractor, its agents, Subcontractors, officers, distributors, resellers or employees in the course of performing its obligations, including without limitation, security procedures, business operations information, or commercial proprietary information in the possession of the State or any Authorized User hereunder or received from another third party, will not be divulged to any third parties. Contractor shall not be required to keep confidential any such material that is publicly available through no fault of Contractor, independently developed by Contractor without reliance on confidential information of the Authorized User, or otherwise obtained under the Freedom of Information Act or other applicable New York State laws and regulations. This warranty shall survive termination of this Contract. Contractor further agrees to take appropriate steps as to its agents, Subcontractors, officers, distributors, resellers or employees regarding the obligations arising under this clause to insure such confidentiality.

15. RELEASE OF BID EVALUATION MATERIALS Requests concerning the evaluation of Bids may be submitted under the Freedom of Information Law. Information, other than statistical or

factual tabulations or data such as the Bid Tabulation, shall only be released as required by law after Contract award. Bid Tabulations are not maintained for all procurements. Names of Bidders may be disclosed after Bid opening upon request. Written requests should be directed to the Commissioner.

16. FREEDOM OF INFORMATION LAW During the evaluation process, the content of each Bid will be held in confidence and details of any Bid will not be revealed (except as may be required under the Freedom of Information Law or other State law). The Freedom of Information Law provides for an exemption from disclosure for trade secrets or information the disclosure of which would cause injury to the competitive position of commercial enterprises. This exception would be effective both during and after the evaluation process. If the Bid contains any such trade secret or other confidential or proprietary information, it must be accompanied in the Bid with a written request to the Commissioner to not disclose such information. Such request must state with particularity the reasons why the information should not be available for disclosure and must be provided at the time of submission of the Bid. Notations in the header, footer or watermark of the Bid Document will not be considered sufficient to constitute a request for non-disclosure of trade secret or other confidential or proprietary information. Where a Freedom of Information request is made for trademark or other confidential or proprietary information, the Commissioner reserves the right to determine upon written notice to the Bidder whether such information qualifies for the exemption for disclosure under the law. Notwithstanding the above, where a Bid tabulation is prepared and Bids publicly opened, such Bid tabulation shall be available upon request.

17. PREVAILING WAGE RATES - PUBLIC WORKS AND BUILDING SERVICES CONTRACTS If any portion of work being Bid is subject to the prevailing wage rate provisions of the Labor Law, the following shall apply:

a. "Public Works" and "Building Services" - Definitions

i. Public Works Labor Law Article 8 applies to contracts for public improvement in which laborers, workers or mechanics are employed on a "public works" project (distinguished from public "procurement" or "service" contracts). The State, a public benefit corporation, a municipal corporation (including a school district), or a commission appointed by law must be a party to the Contract. The wage and hours provision applies to any work performed by Contractor or Subcontractors.

ii. Building Services Labor Law Article 9 applies to Contracts for building service work over $1,500 with a public agency, that: (i) involve the care or maintenance of an existing building, or (ii) involve the transportation of office furniture or equipment to or from such building, or (iii) involve the transportation and delivery of fossil fuel to such building, and (iv) the principal purpose of which is to furnish services through use of building service employees.

b. Prevailing Wage Rate Applicable to Bid Submissions A copy of the applicable prevailing wage rates to be paid or provided are annexed to the Bid Documents. Bidders must submit Bids which are based upon the prevailing hourly wages, and supplements in cash or equivalent benefits (i.e., fringe benefits and any cash or non-cash compensation which are not wages, as defined by law) that equal or exceed the applicable prevailing wage rate(s) for the location where the work is to be performed. Bidders may not submit Bids based upon hourly wage rates and supplements below the applicable prevailing wage rates as established by the New York State Department of Labor. Bids that fail to comply with this requirement will be disqualified.

c. Wage Rate Payments / Changes During Contract Term The wages to be paid under any resulting Contract shall not be less than the prevailing rate of wages and supplements as set forth by law. It is required that the Contractor keep informed of all changes in the Prevailing Wage Rates during the Contract term that apply to the classes of individuals supplied by the Contractor on any projects resulting from this Contract, subject to the provisions of the Labor Law. Contractor is solely liable for and must pay such required prevailing wage adjustments during the Contract term as required by law.

d. Public Posting & Certified Payroll Records In compliance with Article 8, Section 220 of the New York State Labor Law:

i. Posting The Contractor must publicly post on the work site, in a prominent and accessible place, a legible schedule of the prevailing wage rates and supplements.

ii. Payroll Records Contractors and Subcontractors must keep original payrolls or transcripts subscribed and affirmed as true under the penalties of perjury as required by law. For public works contracts over $25,000 where the Contractor maintains no regular place of business in New York State, such records must be kept at the work site. For building services contracts, such records must be kept at the work site while work is being performed.

iii. Submission of Certified Payroll Transcripts for Public Works Contracts Only Contractors and Subcontractors on public works projects must submit monthly payroll transcripts to the Authorized User that has prepared or directs the preparation of the plans and specifications for a public works project, as set forth in the Bid Specifications. For Mini-Bid solicitations, the payroll records must be submitted to the entity preparing the agency Mini-Bid project specification. For "agency specific" Bids, the payroll records should be submitted to the entity issuing the purchase order. For all other OGS Centralized Contracts, such records should be submitted to the individual agency issuing the purchase order(s) for the work. Upon mutual agreement of the Contractor and the Authorized User, the form of submission may be submitted in a specified disk format acceptable to the Department of Labor provided: 1) the Contractor/Subcontractor retains the original records; and, (2) an original signed letter by a duly authorized individual of the Contractor or Subcontractor attesting to the truth and accuracy of the records accompanies the disk. This provision does not apply to Article 9 of the Labor Law building services contracts.

iv. Records Retention Contractors and Subcontractors must preserve such certified transcripts for a period of three years from the date of completion of work on the awarded contract.

Day's Labor Eight hours shall constitute a legal day's work for all classes of employees in this state except those engaged in farm and domestic service unless otherwise provided by law.

No laborers, workmen or mechanics in the employ of the Contractor, Subcontractor or other person doing or contracting to do all or part of the work contemplated by the Contract shall be permitted or required to work more than eight hours in any one calendar day or more than five calendar days in any one week except in cases of extraordinary emergency including fire, flood or danger to life or property. "Extraordinary emergency" shall be deemed to include situations in which sufficient laborers, workers and mechanics cannot be employed to carry on public work expeditiously as a result of such restrictions upon the number of hours and days of labor and the immediate commencement or prosecution or completion without undue delay of the public work is necessary in the judgment of the NYS

Commissioner of Labor for the preservation of the Contract site or for the protection of the life and limb of the persons using the Contract site.

18. TAXES

a. Unless otherwise specified in the Bid Specifications or Contract, the quoted Bid price includes all taxes applicable to the transaction.

b. Purchases made by the State of New York and certain non-State Authorized Users are exempt from New York State and local sales taxes and, with certain exceptions, federal excise taxes. To satisfy the requirements of the New York State Sales tax exemption, either the Purchase Order issued by a State Agency or the invoice forwarded to authorize payment for such purchases will be sufficient evidence that the sale by the Contractor was made to the State, an exempt organization under Section 1116 (a) (1) of the Tax Law. Non-State Authorized Users must offer their own proof of exemption upon request. No person, firm or corporation is, however, exempt from paying the State Truck Mileage and Unemployment Insurance or Federal Social Security taxes, which remain the sole responsibility of the Bidder/Contractor.

c. Pursuant to Revised Tax Law 5-a, Contractor will be required to furnish sales tax certification on its behalf and for its affiliates, and subcontractors for Contracts with a value greater than $100,000 in accordance with provisions of the law.

d. Purchases by Authorized Users other than the State of New York may be subject to certain taxes which were not included in the Bid price, and in those instances the tax should be computed based on the Contract price and added to the invoice submitted to such entity for payment.

19. EXPENSES PRIOR TO CONTRACT EXECUTION The Commissioner and any Authorized User(s) are not liable for any costs incurred by a Vendor, Bidder or Contractor in the preparation and production of a Bid, Mini-Bid or best and final offers or for any work performed prior to Contract execution.

20. ADVERTISING RESULTS The prior written approval of the Commissioner is required in order for results of the Bid to be used by the Contractor as part of any commercial advertising. The Contractor shall also obtain the prior written approval of the Commissioner relative to the Bid or Contract for press or other media releases.

21. PRODUCT REFERENCES

a. "**Or Equal**" In all Bid Specifications the words "or equal" are understood to apply where a copyrighted, brand name, trade name, catalog reference, or patented Product is referenced. References to such specific Product are intended as descriptive, not restrictive, unless otherwise stated. Comparable Product will be considered if proof of compatibility is provided, including appropriate catalog excerpts, descriptive literature, specifications and test data, etc. The Commissioner's decision as to acceptance of the Product as equal shall be final.

b. Discrepancies in References In the event of a discrepancy between the model number referenced in the Bid Specifications and the written description of the Products which cannot be reconciled, with respect to such discrepancy, then the written description shall prevail.

22. REMANUFACTURED, RECYCLED, RECYCLABLE OR RECOVERED MATERIALS Upon the conditions specified in the Bid Specifications and in accordance with the laws of the State of New York, Contractors are encouraged to use recycled, recyclable or recovered materials in the manufacture of Products and packaging to the maximum extent practicable without jeopardizing the performance or intended end use of the Product or packaging unless such use is precluded due to health, welfare, safety requirements or in the Bid Specifications. Contractors are further encouraged to offer remanufactured Products to the maximum extent practicable without jeopardizing the performance or intended end use of the Product and unless such use is precluded due to health, welfare, safety requirements or by the Bid Specifications. Where such use is not practical, suitable, or permitted by the Bid Specifications, Contractor shall deliver new materials in accordance with the "Warranties" set forth below.

Items with recycled, recyclable, recovered, refurbished or remanufactured content must be identified in the Bid or Bidder will be deemed to be offering new Product.

23. PRODUCTS MANUFACTURED IN PUBLIC INSTITUTIONS Bids offering Products that are manufactured or produced in public institutions will be rejected.

24. PRICING

a. Unit Pricing If required by the Bid Specifications, the Bidder should insert the price per unit specified and the price extensions in decimals, not to exceed four places for each item unless otherwise specified, in the Bid. In the event of a discrepancy between the unit price and the extension, the unit price shall govern unless, in the sole judgment of the Commissioner, such unit pricing is obviously erroneous.

b. Net Pricing Unless otherwise required by the Bid Specifications, prices shall be net, including transportation, customs, tariff, delivery and other charges fully prepaid by the Contractor to the destination(s) indicated in the Bid Specifications, subject to the cash discount.

c. "No Charge" Bid When Bids are requested on a number of Products as a Group or Lot, a Bidder desiring to Bid "no charge" on a Product in the Group or Lot must clearly indicate such. Otherwise, such Bid may be considered incomplete and be rejected, in whole or in part, at the discretion of the Commissioner.

d. Educational Pricing All Products to be supplied for educational purposes that are subject to educational discounts shall be identified in the Bid and such discounts shall be made available to qualifying institutions.

e. Third Party Financing If Product acquisitions are financed through any third party financing, Contractor may be required as a condition of Contract Award to agree to the terms and conditions of a "Consent & Acknowledgment Agreement" in a form acceptable to the Commissioner.

f. Best Pricing Offer During the Contract term, if substantially the same or a smaller quantity of a Product is sold by the Contractor outside of this Contract upon the same or similar terms and conditions as that of this Contract at a lower price to a federal, state or local governmental entity, the price under this Contract, at the discretion of the Commissioner, shall be immediately reduced to the lower price.

Price decreases shall take effect automatically during the Contract term and apply to Purchase Orders submitted on or after:

(i) GSA Changes: Where NYS Net Prices are based on an approved GSA Schedule, the date the approved GSA Schedule pricing decreases during the Contract term; or

(ii) Commercial Price List Reductions: Where NYS Net Prices are based on a discount from Contractor's list prices, the date Contractor

lowers its pricing to its customers generally or to similarly situated government customers during the Contract term; or

(iii) Special Offers/Promotions Generally: Where Contractor generally offers more advantageous special price promotions or special discount pricing to other customers during the Contract term for a similar quantity, and the maximum price or discount associated with such offer or promotion is better than the discount or Net Price otherwise available under this Contract, such better price or discount shall apply for similar quantity transactions under this Contract for the life of such general offer or promotion; and

(iv) Special Offers/Promotions to Authorized Users: Contractor may offer Authorized Users, under either this Contract or any other Contracting vehicle, competitive pricing which is lower than the NYS Net Price set forth herein at any time during the Contract term and such lower pricing shall not be applied as a global price reduction under the Contract pursuant to the foregoing paragraph (iii).

Unless otherwise specified in the Bid Specifications, Contractor may offer lower prices or better terms (see Modification of Contract Terms) on any specific Purchase Order(s) from any Authorized User without being in conflict with, or obligation to comply on a global basis, with the terms of this clause.

g. Best and Final Prices As specified in the Bid Documents and Contract, a Contractor may be solicited at the time of issuance of a Purchase Order or Mini-Bid award for best and final pricing for the Product or service to be delivered to the Authorized User. Contractors are encouraged to reduce their pricing upon receipt of such request.

25. DRAWINGS

a. Drawings Submitted With Bid When the Bid Specifications require the Bidder to furnish drawings and/or plans, such drawings and/or plans shall conform to the mandates of the Bid Documents and shall, when approved by the Commissioner, be considered a part of the Bid and of any resulting Contract. All symbols and other representations appearing on the drawings shall be considered a part of the drawing.

b. Drawings Submitted During the Contract Term Where required to develop, maintain and deliver diagrams or other technical schematics regarding the scope of work, Contractor shall do so on an ongoing basis at no additional charge, and must, as a condition of payment, update drawings and plans during the Contract term to reflect additions, alterations, and deletions. Such drawings and diagrams shall be delivered to the Authorized User's representative.

c. Accuracy of Drawings Submitted All drawings shall be neat and professional in manner and shall be clearly labeled as to locations and type of product, connections and components. Drawings and diagrams are to be in compliance with accepted drafting standards. Acceptance or approval of such plans shall not relieve the Contractor from responsibility for design or other errors of any sort in the drawings or plans, or from its responsibility for performing as required, furnishing product, services or installation, or carrying out any other requirements of the intended scope of work.

26. SITE INSPECTION Where a site inspection is required by the Bid Specifications or Project Definition, Bidder shall be required to inspect the site, including environmental or other conditions for pre-existing deficiencies that may affect the installed Product, equipment, or environment or services to be provided and, which may affect Bidder's ability to properly deliver, install or otherwise provide the required Product. All inquiries regarding such conditions shall be made in writing. Bidder shall be deemed to have knowledge of any deficiencies or conditions which such inspection or inquiry might have disclosed. Bidder must provide a detailed explanation with its Bid if additional work is required under this clause in order to properly complete the delivery and installation of the required Product or provide the requested service.

27. PROCUREMENT CARD The State has entered into an agreement for purchasing card services. The Purchasing Card enables Authorized Users to make authorized purchases directly from a Contractor without processing a Purchase Orders or Purchase Authorizations. Purchasing Cards are issued to selected employees authorized to purchase for the Authorized User and having direct contact with Contractors. Cardholders can make purchases directly from any Contractor that accepts the Purchasing Card.

The Contractor shall not process a transaction for payment through the credit card clearinghouse until the purchased products have been shipped or services performed. Unless the cardholder requests correction or replacement of a defective or faulty Product in accordance with other Contract requirements, the Contractor shall immediately credit a cardholder's account for products returned as defective or faulty.

28. SAMPLES

a. Standard Samples Bid Specifications may indicate that the Product to be purchased must be equal to a standard sample on display in a place designated by the Commissioner and such sample will be made available to the Bidder for examination prior to the opening date. Failure by the Bidder to examine such sample shall not entitle the Bidder to any relief from the conditions imposed by the Bid Specifications.

b. Bidder Supplied Samples The Commissioner reserves the right to request from the Bidder/Contractor a representative sample(s) of the Product offered at any time prior to or after award of a contract. Unless otherwise instructed, samples shall be furnished within the time specified in the request. Untimely submission of a sample may constitute grounds for rejection of Bid or cancellation of the Contract. Samples must be submitted free of charge and be accompanied by the Bidder's name and address, any descriptive literature relating to the Product and a statement indicating how and where the sample is to be returned. Where applicable, samples must be properly labeled with the appropriate Bid or Contract reference.

A sample may be held by the Commissioner during the entire term of the Contract and for a reasonable period thereafter for comparison with deliveries. At the conclusion of the holding period the sample, where feasible, will be returned as instructed by the Bidder, at the Bidder's expense and risk. Where the Bidder has failed to fully instruct the Commissioner as to the return of the sample (i.e., mode and place of return, etc.) or refuses to bear the cost of its return, the sample shall become the sole property of the receiving entity at the conclusion of the holding period.

c. Enhanced Samples When an approved sample exceeds the minimum specifications, all Product delivered must be of the same enhanced quality and identity as the sample. Thereafter, in the event of a Contractor's default, the Commissioner may procure a Product substantially equal to the enhanced sample from other sources, charging the Contractor for any additional costs incurred.

d. Conformance with Sample(s) Submission of a sample (whether or not such sample is tested by, or for, the Commissioner) and approval thereof shall not relieve the Contractor from full compliance with all terms and conditions, performance related and otherwise, specified in the Bid Specifications. If in the judgment of the Commissioner the sample or product submitted is not in accordance with the specifications or testing requirements prescribed in the Bid

Specifications, the Commissioner may reject the Bid. If an award has been made, the Commissioner may cancel the Contract at the expense of the Contractor.

e. Testing All samples are subject to tests in the manner and place designated by the Commissioner, either prior to or after Contract award. Unless otherwise stated in the Bid Specifications, Bidder samples consumed or rendered useless by testing will not be returned to the Bidder. Testing costs for samples that fails to meet Contract requirements may be at the expense of the Contractor.

f. Requests For Samples By Authorized Users Requests for samples by Authorized Users require the consent of the Contractor. Where Contractor refuses to furnish a sample, Authorized User may, in its sole discretion, make a determination on the performance capability of the Product or on the issue in question.

BID EVALUATION

29. BID EVALUATION The Commissioner reserves the right to accept or reject any and all Bids, or separable portions of offers, and waive technicalities, irregularities, and omissions if the Commissioner determines the best interests of the State will be served. The Commissioner, in his/her sole discretion, may accept or reject illegible, incomplete or vague Bids and his/her decision shall be final. A conditional or revocable Bid which clearly communicates the terms or limitations of acceptance may be considered, and Contract award may be made in compliance with the Bidder's conditional or revocable terms in the offer.

30. CONDITIONAL BID Unless the Bid Specifications provides otherwise, a Bid is not rendered non-responsive if the Bidder specifies that the award will be accepted only on all or a specified group of items or Product included in the specification. It is understood that nothing herein shall be deemed to change or alter the method of award contained in the Bid Documents.

31. CLARIFICATIONS / REVISIONS Prior to award, the Commissioner reserves the right to seek clarifications, request Bid revisions, or to request any information deemed necessary for proper evaluation of Bids from all Bidders deemed to be eligible for Contract award. Failure to provide requested information may result in rejection of the Bid.

32. PROMPT PAYMENT DISCOUNTS While prompt payment discounts will not be considered in determining the low Bid, the Commissioner may consider any prompt payment discount in resolving Bids which are otherwise tied. However, any notation indicating that the price is net, (e.g., net 30 days), shall be understood to mean only that no prompt payment discount is offered by the Bidder. The imposition of service, interest, or other charges, except pursuant to the provisions of Article 11-A of the State Finance Law, which are applicable in any case, may render the Bid non-responsive and may be cause for its rejection.

33. EQUIVALENT OR IDENTICAL BIDS In the event two offers are found to be substantially equivalent, price shall be the basis for determining the award recipient. If two or more Bidders submit substantially equivalent Bids as to pricing or other factors, the decision of the Commissioner to award a Contract to one or more of such Bidders shall be final.

34. PERFORMANCE AND RESPONSIBILITY QUALIFICATIONS The Commissioner reserves the right to investigate or inspect at any time whether or not the Product, services, qualifications or facilities offered by the Bidder/Contractor meet the requirements set forth in the Bid Specifications/Contract or as set forth during Contract negotiations. Contractor shall at all times during the Contract term remain responsible and responsive. A Bidder/Contractor must be prepared, if requested by the Commissioner, to present evidence of legal authority to do business in New York State, integrity, experience, ability, prior performance, organizational and financial capacity as well as where applicable, a statement as to supply, plant, machinery and capacity of the manufacturer or source for the production, distribution and servicing of the Product offered/Bid. If the Commissioner determines that the conditions and terms of the Bid Documents, Bid Specifications or Contract are not complied with, or that items, services or Product proposed to be furnished do not meet the specified requirements, or that the legal authority, integrity experience, ability, prior performance, organization and financial capacity or facilities are not satisfactory, the Commissioner may reject such Bid or terminate the Contract.

35. DISQUALIFICATION FOR PAST PERFORMANCE AND FINDINGS OF NON-RESPONSIBILITY Bidder may be disqualified from receiving awards if Bidder, or anyone in Bidder's employment, has previously failed to perform satisfactorily in connection with public Bidding or contracts or is deemed non-responsible.

36. QUANTITY CHANGES PRIOR TO AWARD The Commissioner reserves the right, at any time prior to the award of a specific quantity Contract, to alter in good faith the quantities listed in the Bid Specifications. In the event such right is exercised, the lowest responsible Bidder meeting Bid Specifications will be advised of the revised quantities and afforded an opportunity to extend or reduce its Bid price in relation to the changed quantities. Refusal by the low Bidder to so extend or reduce its Bid price may result in the rejection of its Bid and the award of such Contract to the lowest responsible Bidder who accepts the revised qualifications.

37. TIMEFRAME FOR OFFERS The Commissioner reserves the right to make awards within sixty (60) days after the date of the Bid opening or such other period of time as set forth in the Bid Documents, during which period, Bids must remain firm and cannot e withdrawn. Pursuant to Section 163(9)(e) of the State Finance Law and Section 2-205 of the Uniform Commercial Code when applicable, where an award is not made within the sixty (60) day period or other time specified as set forth in the Bid Documents, the Bids shall remain firm until such later time as either a Contract is awarded or the Bidder delivers to the Commissioner written notice of the withdrawal of its Bid. Any Bid which expressly states therein that acceptance must be made within a shorter specified time, may at the sole discretion of the Commissioner, be accepted or rejected.

TERMS & CONDITIONS

38. CONTRACT CREATION / EXECUTION Except for contracts governed by Article 11-B of the State Finance Law, subject to and upon receipt of all required approvals as set forth in the Bid Specifications a Contract shall be deemed executed and created with the successful Bidder(s), upon the Commissioner's mailing or electronic communication to the address on the Bid/Contract of: (i) the final Contract Award Notice; (ii) a fully executed Contract; or (iii) a Purchase Order authorized by the Commissioner.

39. PARTICIPATION IN CENTRALIZED CONTRACTS The following shall not limit or inhibit the OGS Commissioner's authority under State Finance Law, Section 163 (10) (e) (Piggybacking):

a. Agencies All State Agencies may utilize and purchase under any state Centralized Contract let by the Commissioner, unless the Bid Documents limit purchases to specific State Agencies.

b. Non-State Agency Authorized Users Authorized Users other than State Agencies are permitted to make purchases through state Centralized Contracts where permitted by law, the Contract or the Commissioner.

c. Voluntary Extension Purchase Orders issued against a State Centralized Contract by any Authorized User not provided for in the Bid Specifications shall be honored by the Contractor at its discretion and only with the approval of the OGS Commissioner and any other approvals required by law. Contractors are encouraged to voluntarily extend service Contracts to those additional entities authorized to utilize commodity Contracts under Section 163 (3) (iv) of the State Finance Law.

d. Responsibility for Performance Participation in state Centralized Contracts by Authorized Users is permitted upon the following conditions: (i) the responsibility with regard to performance of any contractual obligation, covenant, condition or term thereunder by any Authorized User other than State Agencies shall be borne and is expressly assumed by such Authorized User and not by the State; (ii) a breach of the Contract by any particular Authorized User shall neither constitute nor be deemed a breach of the Contract as a whole which shall remain in full force and effect, and shall not affect the validity of the Contract nor the obligations of the Contractor thereunder respecting non-breaching Authorized Users, whether State or otherwise; (iii) for a breach by an Authorized User other than a State Agency, the State specifically and expressly disclaims any and all liability for such breach; and (iv) each non-state agency Authorized User and Contractor guarantees to save the State, its officers, agents and employees harmless from any liability that may be or is imposed by their failure to perform in accordance with its obligations under the Contract.

e. Contract Migration Authorized Users holding individual Contracts with a Contractor at the time that Contractor is awarded a Centralized Contract for the same Products or services shall be permitted to migrate to that Centralized Contract effective with its commencement date. Such migration shall not operate to diminish, alter or eliminate any right that the Authorized User otherwise had under the terms and conditions of their individual Contract.

40. MODIFICATION OF CONTRACT TERMS The terms and conditions set forth in the Contract shall govern all transactions by Authorized User(s) under this Contract. The Contract may only be modified or amended upon mutual written agreement of the Commissioner and Contractor.

The Contractor may, however, offer Authorized User(s) more advantageous pricing, payment, or other terms and conditions than those set forth in the Contract. In such event, a copy of such terms shall be furnished to the Authorized User(s) and Commissioner by the Contractor at the time of such offer.

Other than where such terms are more advantageous for the Authorized User(s) than those set forth in the Contract, no alteration or modification of the terms of the Contract, including substitution of Product, shall be valid or binding against Authorized User(s) unless authorized by the Commissioner or specified in the Contract Award Notification. No such alteration or modification shall be made by unilaterally affixing such terms to Product upon delivery (including, but not limited to, attachment or inclusion of standard pre-printed order forms, product literature, "shrink wrap" terms accompanying software upon delivery, or other documents) or by incorporating such terms onto order forms, purchase orders or other documents forwarded by the Contractor for payment, notwithstanding Authorized User's subsequent acceptance of Product, or that Authorized User has subsequently processed such document for approval or payment.

41. SCOPE CHANGES The Commissioner reserves the right, unilaterally, to require, by written order, changes by altering, adding to or deducting from the Bid Specifications, such changes to be within the general scope of the Contract. The Commissioner may make an equitable adjustment in the Contract price or delivery date if the change affects the cost or time of performance. Such equitable adjustments require the consent of the Contractor, which consent shall not be unreasonably withheld.

42. ESTIMATED / SPECIFIC QUANTITY CONTRACTS Estimated quantity contracts are expressly agreed and understood to be made for only the quantities, if any, actually ordered during the Contract term. No guarantee of any quantity(s) is implied or given. Purchases by Authorized Users from Contracts for services and technology are voluntary.

With respect to any specific quantity stated in the contract, the Commissioner reserves the right after award to order up to 20% more or less (rounded to the next highest whole number) than the specific quantities called for in the Contract. Notwithstanding the foregoing, the Commissioner may purchase greater or lesser percentages of Contract quantities should the Commissioner and Contractor so agree. Such agreement may include an equitable price adjustment.

43. EMERGENCY CONTRACTS In the event that a disaster emergency is declared by Executive Order under Section 28 of Article 2-B of the Executive Law, or the Commissioner determines pursuant to his/her authority under Section 163 (10) (b) of the State Finance Law that an emergency exists requiring the prompt and immediate delivery of Product, the Commissioner reserves the right to obtain such Product from any source, including but not limited to this Contract(s), as the Commissioner in his/her sole discretion determines will meet the needs of such emergency. Contractor shall not be entitled to any claim or lost profits for Product procured from other sources pursuant to this paragraph. The reasons underlying the finding that an emergency exists shall be included in the procurement record.

44. PURCHASE ORDERS Unless otherwise authorized in writing by the Commissioner, no Product is to be delivered or furnished by Contractor until transmittal of an official Purchase Order from the Authorized User. Unless terminated or cancelled pursuant to the authority vested in the Commissioner, Purchase Orders shall be effective and binding upon the Contractor when placed in the mail or electronically transmitted prior to the termination of the contract period, addressed to the Contractor at the address for receipt of orders set forth in the Contract or in the Contract Award Notification.

All Purchase Orders issued pursuant to Contracts let by the Commissioner must bear the appropriate Contract number and, if necessary, required State approvals. As deemed necessary, the Authorized User may confirm pricing and other Product information with the Contractor prior to placement of the Purchase Order. The State reserves the right to require any other information from the Contractor which the State deems necessary in order to complete any Purchase Order placed under the Contract. Unless otherwise specified, all Purchase Orders against Centralized Contracts will be placed by Authorized Users directly with the Contractor and any discrepancy between the terms stated on the vendor's order form, confirmation or acknowledgment, and the Contract terms shall be resolved in favor of

the terms most favorable to the Authorized User. Should an Authorized User add written terms and conditions to the Purchase Order that conflict with the terms and conditions of the Contract, the Contractor has the option of rejecting the Purchase Order within five business days of its receipt but shall first attempt to negotiate the additional written terms and conditions in good faith with the Authorized User, or fulfill the Purchase Order. Notwithstanding the above, the Authorized User reserves the right to dispute any discrepancies arising from the presentation of additional terms and conditions with the Contractor.

If, with respect to an Agency Specific Contract let by the OGS Commissioner, a Purchase Order is not received by the Contractor within two weeks after the issuance of a Contract Award Notification, it is the responsibility of the Contractor to request in writing that the appropriate Authorized User forward a Purchase Order. If, thereafter, a Purchase Order is not received within a reasonable period of time, the Contractor shall promptly notify in writing the appropriate purchasing officer in OGS. Failure to timely notify such officer may, in the discretion of the OGS Commissioner and without cost to the State, result in the cancellation of such requirement by the OGS Commissioner with a corresponding reduction in the Contract quantity and price.

45. PRODUCT DELIVERY Delivery must be made as ordered to the address specified on the Purchase Order and in accordance with the terms of the Contract or Contract Award Notice. Unless otherwise specified in the Bid Documents, delivery shall be made within thirty calendar days after receipt of a Purchase Order by the Contractor. The decision of the Commissioner as to compliance with delivery terms shall be final. The burden of proof for delay in receipt of Purchase Order shall rest with the Contractor. In all instances of a potential or actual delay in delivery, the Contractor shall immediately notify the Commissioner and the Authorized User, and confirm in writing the explanation of the delay, and take appropriate action to avoid any subsequent late deliveries. Any extension of time for delivery must be requested in writing by the Contractor and approved in writing by the Authorized User. Failure to meet such delivery time schedule may be grounds for cancellation of the order or, in the Commissioner's discretion, the Contract.

46. WEEKEND AND HOLIDAY DELIVERIES Unless otherwise specified in the Bid Specifications or by an Authorized User, deliveries will be scheduled for ordinary business hours, Monday through Friday (excluding legal holidays observed by the State of New York). Deliveries may be scheduled by mutual agreement for Saturdays, Sundays or legal holidays observed by the State of New York where the Product is for daily consumption, an emergency exists, the delivery is a replacement, delivery is late, or other reasonable circumstance in which event the convenience of the Authorized User shall govern.

47. SHIPPING/RECEIPT OF PRODUCT

a. Packaging Tangible Product shall be securely and properly packed for shipment, storage and stocking in appropriate, clearly labeled shipping containers and according to accepted commercial practice, without any extra charges for packing materials, cases or other types of containers. The container shall become and remain the property of the Authorized User unless otherwise specified in the Contract documents.

b. Shipping Charges Unless otherwise stated in the Bid Specifications, all deliveries shall be deemed to be freight on board (F.O.B.) destination tailgate delivery at the dock of the Authorized User. Unless otherwise agreed, items purchased at a price F.O.B. Shipping point plus transportation charges shall not relieve the Contractor from responsibility for safe and proper delivery notwithstanding the Authorized User's payment of transportation charges. Contractor shall be responsible for ensuring that the Bill of Lading states "charges prepaid" for all shipments.

c. Receipt of Product The Contractor shall be solely responsible for assuring that deliveries are made to personnel authorized to accept delivery on behalf of the Authorized User. Any losses resulting from the Contractor's failure to deliver Product to authorized personnel shall be borne exclusively by the Contractor.

48. TITLE AND RISK OF LOSS Notwithstanding the form of shipment, title or other property interest, risk of loss shall not pass from the Contractor to the Authorized User until the Products have been received, inspected and accepted by the receiving entity. Acceptance shall occur within a reasonable time or in accordance with such other defined acceptance period as may be specified in the Bid Specifications or Purchase Order. Mere acknowledgment by Authorized User personnel of the delivery or receipt of goods (e.g., signed bill of lading) shall not be deemed or construed as acceptance of the Products received. Any delivery of Product that is substandard or does not comply with the Bid Specifications or Contract terms and conditions, may be rejected or accepted on an adjusted price basis, as determined by the Commissioner.

49. RE-WEIGHING PRODUCT Deliveries are subject to re-weighing at the point of destination by the Authorized User. If shrinkage occurs which exceeds that normally allowable in the trade, the Authorized User shall have the option to require delivery of the difference in quantity or to reduce the payment accordingly. Such option shall be exercised in writing by the Authorized User.

50. PRODUCT SUBSTITUTION In the event a specified manufacturer's Product listed in the Contract becomes unavailable or cannot be supplied by the Contractor for any reason (except as provided for in the Savings/Force Majeure Clause) a Product deemed in writing by the Commissioner to be equal to or better than the specified Product must be substituted by the Contractor at no additional cost or expense to the Authorized User. Unless otherwise specified, any substitution of Product prior to the Commissioner's written approval may be cause for cancellation of Contract.

51. REJECTED PRODUCT When Product is rejected, it must be removed by the Contractor from the premises of the Authorized User within ten calendar days of notification of rejection by the Authorized User. Upon notification of rejection, risk of loss of rejected or non-conforming Product shall remain with Contractor. Rejected items not removed by the Contractor within ten calendar days of notification shall be regarded as abandoned by the Contractor, and the Authorized User shall have the right to dispose of Product as its own property. The Contractor shall promptly reimburse the Authorized User for any and all costs and expenses incurred in storage or effecting removal or disposition after the ten-calendar day period.

52. INSTALLATION Where installation is required, Contractor shall be responsible for placing and installing the Product in the required locations. All materials used in the installation shall be of good quality and shall be free from any and all defects that would mar the appearance of the Product or render it structurally unsound. Installation includes the furnishing of any equipment, rigging and materials required to install or place the Product in the proper location. The Contractor shall protect the site from damage for all its work and shall repair damages or injury of any kind caused by the Contractor, its employees, officers or agents. If any alteration, dismantling or excavation, etc. is required to effect installation, the Contractor shall thereafter promptly restore the structure or site. Work shall be

performed to cause the least inconvenience to the Authorized User(s) and with proper consideration for the rights of other Contractors or workers. The Contractor shall promptly perform its work and shall coordinate its activities with those of other Contractors. The Contractor shall clean up and remove all debris and rubbish from its work as required or directed. Upon completion of the work, the building and surrounding area of work shall be left clean and in a neat, unobstructed condition, and everything in satisfactory repair and order.

53. REPAIRED OR REPLACED PARTS / COMPONENTS Where the Contractor is required to repair, replace or substitute Product or parts or components of the Product under the Contract, the repaired, replaced or substituted Products shall be subject to all terms and conditions for new parts and components set forth in the Contract including Warranties, as set forth in the Additional Warranties Clause herein. Replaced or repaired Product or parts and components of such Product shall be new and shall, if available, be replaced by the original manufacturer's component or part. Remanufactured parts or components meeting new Product standards may be permitted by the Commissioner or Authorized User. Before installation, all proposed substitutes for the original manufacturer's installed parts or components must be approved by the Authorized User. The part or component shall be equal to or of better quality than the original part or component being replaced.

54. ON-SITE STORAGE With the written approval of the Authorized User, materials, equipment or supplies may be stored at the Authorized User's site at the Contractor's sole risk.

55. EMPLOYEES, SUBCONTRACTORS & AGENTS All employees, Subcontractors or agents performing work under the Contract must be trained staff or technicians who meet or exceed the professional, technical and training qualifications set forth in the Bid Specifications or the Bid Documents, whichever is more restrictive, and must comply with all security and administrative requirements of the Authorized User. The Commissioner reserves the right to conduct a security background check or otherwise approve any employee, Subcontractor or agent furnished by Contractor and to refuse access to or require replacement of any personnel for cause based on, including but not limited to, professional, technical or training qualifications, quality of work or change in security status or non-compliance with Authorized User's security or other requirements. Such approval shall not relieve the Contractor of the obligation to perform all work in compliance with the Contract terms. The Commissioner reserves the right to reject and/or bar from the facility for cause any employee, Subcontractor, or agents of the Contractor.

56. ASSIGNMENT The Contractor shall not assign, transfer, convey, sublet, or otherwise dispose of the contract or its right, title or interest therein, or its power to execute such contract to any other person, company, firm or corporation in performance of the contract without the prior written consent of the Commissioner or Authorized User (as applicable). Failure to obtain consent to assignment from the Authorized User shall revoke and annul such Contract. Notwithstanding the foregoing, the State shall not hinder, prevent or affect assignment of money by a Contractor for the benefit of its creditors. Prior to a consent to assignment of monies becoming effective, the Contractor shall file a written notice of such monies assignment(s) with the Comptroller. Prior to a consent to assignment of a Contract, or portion thereof, becoming effective, the Contractor shall submit the request to assignment to the Commissioner and seek written agreement from the Commissioner which will be filed with the Comptroller. The Commissioner reserves the right to reject any proposed assignee in his/her discretion.

Upon notice to the Contractor, the Contract may be assigned without the consent of the Contractor to another State Agency or subdivision of the State pursuant to a governmental reorganization or assignment of functions under which the functions are transferred to a successor Agency or to another Agency that assumes OGS responsibilities for the Contract.

57. SUBCONTRACTORS AND SUPPLIERS The Commissioner reserves the right to reject any proposed Subcontractor or supplier for bona fide business reasons, which may include, but are not limited to: they are on the Department of Labor's list of companies with which New York State cannot do business; the Commissioner determines that the company is not qualified; the Commissioner determines that the company is not responsible; the company has previously provided unsatisfactory work or services; the company failed to solicit minority and women's business enterprises (M/WBE) Bidders as required by prior Contracts.

58. PERFORMANCE / BID BOND The Commissioner reserves the right to require a Bidder or Contractor to furnish without additional cost, a performance, payment or Bid bond or negotiable irrevocable letter of credit or other form of security for the faithful performance of the Contract. Where required, such bond or other security shall be in the form prescribed by the Commissioner.

59. SUSPENSION OF WORK The Commissioner, in his/her sole discretion, reserves the right to suspend any or all activities under this Contract, at any time, in the best interests of the Authorized User. In the event of such suspension, the Contractor will be given a formal written notice outlining the particulars of such suspension. Examples of the reason for such suspension include, but are not limited to, a budget freeze or reduction on State spending, declaration of emergency, contract compliance issues or other such circumstances. Upon issuance of such notice, the Contractor is not to accept any Purchase Orders, and shall comply with the suspension order. Activity may resume at such time as the Commissioner issues a formal written notice authorizing a resumption of performance under the Contract.

An Authorized User may issue a formal written notice for the suspension of work for which it has engaged the Contractor for reasons specified in the above paragraph. The written notice shall set forth the reason for such suspension and a copy of the written notice shall be provided to the Commissioner.

60. TERMINATION

a. For Cause: For a material breach that remains uncured for more than thirty (30) days or other specified period after written notice to the Contractor, the Contract or Purchase Order may be terminated by the Commissioner or Authorized User at the Contractor's expense where Contractor becomes unable or incapable of performing, or meeting any requirements or qualifications set forth in the Contract, or for non-performance, or upon a determination that Contractor is non-responsible. Such termination shall be upon written notice to the Contractor. In such event, the Commissioner or Authorized User may complete the contractual requirements in any manner it may deem advisable and pursue available legal or equitable remedies for breach.

b. For Convenience: By written notice, this Contract may be terminated at any time by the State for convenience upon sixty (60) days written notice or other specified period without penalty or other early termination charges due. Such termination of the Contract shall not affect any project or Purchase Order that has been issued under the Contract prior to the date of such termination. If the Contract is terminated pursuant to this subdivision, the Authorized User shall remain liable for all accrued but unpaid charges incurred through the date of the termination. Contractor shall use due diligence and provide any outstanding deliverables.

c. For Violation of the Sections 139-j and 139-k of the State Finance Law: The Commissioner reserves the right to terminate the Contract in the event it is found that the certification filed by the Bidder in accordance with Section 139-k of the State Finance Law was intentionally false or intentionally incomplete. Upon such finding, the Commissioner may exercise its termination right by providing written notification to the Contractor in accordance with the written notification terms of the Contract.

d. For Violation of Revised Tax Law 5a: The Commissioner reserves the right to terminate the contract in the event it is found that the certification filed by the Contractor in accordance with §5-a of the Tax Law is not timely filed during the term of the Contract or the certification furnished was intentionally false or intentionally incomplete. Upon such finding, the Commissioner may exercise its termination right by providing written notification to the Contractor.

61. SAVINGS/FORCE MAJEURE A force majeure occurrence is an event or effect that cannot be reasonably anticipated or controlled. Force majeure includes, but is not limited to, acts of God, acts of war, acts of public enemies, strikes, fires, explosions, actions of the elements, floods, or other similar causes beyond the control of the Contractor or the Commissioner in the performance of the Contract which non- performance, by exercise of reasonable diligence, cannot be prevented. Contractor shall provide the Commissioner with written notice of any force majeure occurrence as soon as the delay is known.

Neither the Contractor nor the Commissioner shall be liable to the other for any delay in or failure of performance under the Contract due to a force majeure occurrence. Any such delay in or failure of performance shall not constitute default or give rise to any liability for damages. The existence of such causes of such delay or failure shall extend the period for performance to such extent as determined by the Contractor and the Commissioner to be necessary to enable complete performance by the Contractor if reasonable diligence is exercised after the cause of delay or failure has been removed.

Notwithstanding the above, at the discretion of the Commissioner where the delay or failure will significantly impair the value of the Contract to the State or to Authorized Users, the Commissioner may:

a. Accept allocated performance or deliveries from the Contractor. The Contractor, however, hereby agrees to grant preferential treatment to Authorized Users with respect to Product subjected to allocation; and/or

b. Purchase from other sources (without recourse to and by the Contractor for the costs and expenses thereof) to replace all or part of the Products which are the subject of the delay, which purchases may be deducted from the Contract quantities without penalty or liability to the State; or

c. Terminate the Contract or the portion thereof which is subject to delays, and thereby discharge any unexecuted portion of the Contract or the relative part thereof.

In addition, the Commissioner reserves the right, in his/her sole discretion, to make an equitable adjustment in the Contract terms and/or pricing should extreme and unforeseen volatility in the marketplace affect pricing or the availability of supply. "Extreme and unforeseen volatility in the marketplace" is defined as market circumstances which meet the following criteria: (i) the volatility is due to causes outside the control of Contractor; (ii) the volatility affects the marketplace or industry, not just the particular Contract source of supply; (iii) the effect on pricing or availability of supply is substantial; and (iv) the volatility so affects Contractor's performance that continued performance of the Contract would result in a substantial loss.

62. CONTRACT BILLINGS Contractor and the distributors/resellers designated by the Contractor, if any, shall provide complete and accurate billing invoices to each Authorized User in order to receive payment. Billings for Authorized Users must contain all information required by the Contract and the State Comptroller. The State Comptroller shall render payment for Authorized User purchases, and such payment shall be made in accordance with ordinary State procedures and practices. Payment of Contract purchases made by Authorized Users, other than Agencies, shall be billed directly by Contractor on invoices/vouchers, together with complete and accurate supporting documentation as required by the Authorized User.

Submission of an invoice and payment thereof shall not preclude the Commissioner from reimbursement or demanding a price adjustment in any case where the Product delivered is found to deviate from the terms and conditions of the Contract or where the billing was inaccurate.

Contractor shall provide, upon request of the Commissioner, any and all information necessary to verify the accuracy of the billings. Such information shall be provided in the format requested by the Commissioner and in a media commercially available from the Contractor. The Commissioner may direct the Contractor to provide the information to the State Comptroller or to any Authorized User of the Contract.

63. DEFAULT – AUTHORIZED USER

a. Breach of Authorized User Not Breach of Centralized Contract. An Authorized User's breach shall not be deemed a breach of the Centralized Contract, rather it shall be deemed a breach of the Authorized User's performance under the terms and conditions of the Centralized Contract.

b. Failure to Make Payment. In the event a participating Authorized User fails to make payment to the Contractor for Products delivered, accepted and properly invoiced, within 60 days of such delivery and acceptance, the Contractor may, upon 10 days advance written notice to both the Commissioner and the Authorized User's purchasing official, suspend additional shipments of Product or provision of services to such entity until such time as reasonable arrangements have been made and assurances given by such entity for current and future Contract payments.

c. Notice of Breach. Notwithstanding the foregoing, the Contractor shall, at least 10 days prior to declaring a breach of Contract by any Authorized User, by certified or registered mail, notify both the Commissioner and the purchasing official of the breaching Authorized User of the specific facts, circumstances and grounds upon which a breach will be declared.

d. It is understood, however, that if the Contractor's basis for declaring a breach is insufficient, the Contractor's declaration of breach and failure to service an Authorized User shall constitute a breach of its Contract and the Authorized User may thereafter seek any remedy available at law or equity.

64. INTEREST ON LATE PAYMENTS

a. State Agencies The payment of interest on certain payments due and owed by Agency may be made in accordance with Article 11-A of the State Finance Law (SFL §179-d et. Seq.) and Title 2 of the New York Code of Rules and Regulations, Part 18 (Implementation of Prompt Payment Legislation -2 NYCRR §18.1 et seq.).

b. By Non-State Agencies The terms of Article 11-A apply only to procurements by and the consequent payment obligations of Agencies. Neither expressly nor by any implication is the statute applicable to Non-State Authorized Users. Neither OGS nor the State Comptroller is responsible for payments on any purchases made by a Non-State Agency Authorized User.

c. By Contractor Should the Contractor be liable for any payments to the State hereunder, interest, late payment charges and collection fee charges will be determined and assessed pursuant to Section 18 of the State Finance Law.

65. REMEDIES FOR BREACH It is understood and agreed that all rights and remedies afforded below shall be in addition to all remedies or actions otherwise authorized or permitted by law:

a. Cover/Substitute Performance In the event of Contractor's material breach, the Commissioner may, with or without formally Bidding: (i) Purchase from other sources; or (ii) If the Commissioner is unsuccessful after making reasonable attempts, under the circumstances then existing, to timely obtain acceptable service or acquire replacement Product of equal or comparable quality, the Commissioner may acquire acceptable replacement Product of lesser or greater quality.

Such purchases may, in the discretion of the Commissioner, be deducted from the Contract quantity and payments due Contractor.

b. Withhold Payment In any case where a question of non-performance by Contractor arises, payment may be withheld in whole or in part at the discretion of the Commissioner. Should the amount withheld be finally paid, a cash discount originally offered may be taken as if no delay in payment had occurred.

c. Bankruptcy In the event that the Contractor files a petition under the U.S. Bankruptcy Code during the term of this Centralized Contract, Authorized Users may, at their discretion, make application to exercise its right to set-off against monies due the Debtor or, under the Doctrine of Recoupment, credit the Authorized User the amounts owed by the Contractor arising out of the same transactions.

d. Reimbursement of Costs Incurred The Contractor agrees to reimburse the Authorized User promptly for any and all additional costs and expenses incurred for acquiring acceptable services, and/or replacement Product. Should the cost of cover be less than the Contract price, the Contractor shall have no claim to the difference. The Contractor covenants and agrees that in the event suit is successfully prosecuted for any default on the part of the Contractor, all costs and expenses expended or incurred by the Authorized User in connection therewith, including reasonable attorney's fees, shall be paid by the Contractor.

Where the Contractor fails to timely deliver pursuant to the guaranteed delivery terms of the Contract, the ordering Authorized User may rent substitute equipment temporarily. Any sums expended for such rental shall, upon demand, be reimbursed to the Authorized User promptly by the Contractor or deducted by the Authorized User from payments due or to become due the Contractor on the same or another transaction.

e. Deduction/Credit Sums due as a result of these remedies may be deducted or offset by the Authorized User from payments due, or to become due, the Contractor on the same or another transaction. If no deduction or only a partial deduction is made in such fashion the Contractor shall pay to the Authorized User the amount of such claim or portion of the claim still outstanding, on demand. The Commissioner reserves the right to determine the disposition of any rebates, settlements, restitution, liquidated damages, etc., which arise from the administration of the Contract.

66. ASSIGNMENT OF CLAIM Contractor hereby assigns to the State any and all its claims for overcharges associated with this Contract which may arise under the antitrust laws of the United States, 15 USC Section 1, et. seq. and the antitrust laws of the State of New York, General Business Law Section 340, et. seq.

67. TOXIC SUBSTANCES Each Contractor furnishing a toxic substance as defined by Section 875 of the Labor Law, shall provide such Authorized User with not less than two copies of a material safety data sheet, which sheet shall include for each such substance the information outlined in Section 876 of the Labor Law.

Before any chemical product is used or applied on or in any building, a copy of the product label and Material Safety Data Sheet must be provided to and approved by the Authorized User agency representative.

68. INDEPENDENT CONTRACTOR It is understood and agreed that the legal status of the Contractor, its agents, officers and employees under this Contract is that of an independent Contractor, and in no manner shall they be deemed employees of the Authorized User, and therefore are not entitled to any of the benefits associated with such employment. The Contractor agrees, during the term of this Contract, to maintain at Contractor's expense those benefits to which its employees would otherwise be entitled by law, including health benefits, and all necessary insurance for its employees, including worker's compensation, disability and unemployment insurance, and to provide the Authorized User with certification of such insurance upon request. The Contractor remains responsible for all applicable federal, state and local taxes, and all FICA contributions.

69. SECURITY Contractor warrants, covenants and represents that it will comply fully with all security procedures of the Authorized User(s) in performance of the Contract including but not limited to physical, facility, documentary and cyber security rules, procedures and protocols.

70. COOPERATION WITH THIRD PARTIES The Contractor shall be responsible for fully cooperating with any third party, including but not limited to other Contractors or Subcontractors of the Authorized User, as necessary to ensure delivery of Product or coordination of performance of services.

71. CONTRACT TERM - RENEWAL In addition to any stated renewal periods in the Contract, any Contract or unit portion thereof let by the Commissioner may be extended by the Commissioner for an additional period(s) of up to one year with the written concurrence of the Contractor and Comptroller. Such extension may be exercised on a month to month basis or in other stated periods of time during the one year extension.

72. ADDITIONAL WARRANTIES Where Contractor, product manufacturer or service provider generally offers additional or more advantageous warranties than set forth below, Contractor shall offer or pass through any such warranties to Authorized Users. Contractor hereby warrants and represents:

a. Product Performance Contractor warrants and represents that Products delivered pursuant to this Contract conform to the manufacturer's specifications, performance standards and documentation, and the documentation fully describes the proper procedure for using the Products.

b. Title and Ownership Warranty Contractor warrants, represents and conveys (i) full ownership, clear title free of all liens, or (ii) the right to transfer or deliver perpetual license rights to any Products transferred to Authorized User under this Contract. Contractor shall be solely liable for any costs of acquisition associated therewith. Contractor fully indemnifies the Authorized User for any loss, damages or actions arising from a breach of said warranty without limitation.

c. Contractor Compliance Contractor represents and warrants to pay, at its sole expense, for all applicable permits, licenses, tariffs, tolls and fees to give all notices and comply with all laws, ordinances, rules and regulations of any governmental entity in conjunction with the performance of obligations under the Contract. Prior to award and during the Contract term and any renewals thereof, Contractor must establish to the satisfaction of the Commissioner that it meets or exceeds all requirements of the Bid/Contract and any applicable laws, including but not limited to, permits, insurance coverage, licensing, proof of coverage for worker's compensation, and shall provide such proof as required by the Commissioner. Failure to do so may constitute grounds for the Commissioner to cancel or suspend this Contract, in whole or in part, or to take any other action deemed necessary by the Commissioner.

d. Product Warranty Unless recycled or recovered materials are available in accordance with the "Recycled or Recovered Materials" clause, Product offered shall be standard new equipment, current model or most recent release of regular stock product with all parts regularly used with the type of equipment offered; and no attachment or part has been substituted or applied contrary to the manufacturer's recommendations and standard practice.

Contractor further warrants and represents that components or deliverables specified and furnished by or through Contractor shall individually, and where specified and furnished as a system, be substantially uninterrupted or error-free in operation and guaranteed against faulty material and workmanship for the warranty period, or for a minimum of one (1) year from the date of acceptance, whichever is longer ("Project warranty period"). During the Project warranty period, defects in the materials or workmanship of components or deliverables specified and furnished by or through Contractor shall be repaired or replaced by Contractor at no cost or expense to the Authorized User. Contractor shall extend the Project warranty period for individual component(s), or for the System as a whole, as applicable, by the cumulative period(s) of time, after notification, during which an individual component or the System requires servicing or replacement (down time) or is in the possession of the Contractor, its agents, officers, Subcontractors, distributors, resellers or employees ("extended warranty").

Where Contractor, the Independent Software Vendor "ISV," or other third party manufacturer markets any Project Deliverable delivered by or through Contractor with a standard commercial warranty, such standard warranty shall be in addition to, and not relieve the Contractor from, Contractor's warranty obligations during the project warranty and extended warranty period(s). Where such standard commercial warranty covers all or some of the Project warranty or extended warranty period(s), Contractor shall be responsible for the coordination during the Project warranty or extended warranty period(s) with ISV or other third party manufacturer(s) for warranty repair or replacement of ISV or other third party manufacturer's Product.

Where Contractor, ISV or other third party manufacturer markets any Project Deliverable with a standard commercial warranty which goes beyond the Project warranty or extended warranty period(s), Contractor shall notify the Authorized User and pass through the manufacturer's standard commercial warranty to Authorized User at no additional charge; provided, however, that Contractor shall not be responsible for coordinating services under the third party extended warranty after expiration of the Project warranty and extended warranty period(s).

e. Replacement Parts Warranty If during the regular or extended warranty period's faults develop, the Contractor shall promptly repair or, upon demand, replace the defective unit or component part affected. All costs for labor and material and transportation incurred to repair or replace defective Product during the warranty period shall be borne solely by the Contractor, and the State or Authorized User shall in no event be liable or responsible therefor.

Any part of component replaced by the Contractor under the Contract warranty shall be replaced at no cost to the Authorized User and guaranteed for the greater of: a) the warranty period under paragraph (d) above; or b) if a separate warranty for that part or component is generally offered by the manufacturer, the standard commercial warranty period offered by the manufacturer for the individual part or component.

f. Virus Warranty The Contractor represents and warrants that Licensed Software contains no known viruses. Contractor is not responsible for viruses introduced at Licensee's site.

g. Date/Time Warranty Contractor warrants that Product(s) furnished pursuant to this Contract shall, when used in accordance with the Product documentation, be able to accurately process date/time data (including, but not limited to, calculating, comparing, and sequencing) transitions, including leap year calculations. Where a Contractor proposes or an acquisition requires that specific Products must perform as a package or system, this warranty shall apply to the Products as a system.

Where Contractor is providing ongoing services, including but not limited to: i) consulting, integration, code or data conversion, ii) maintenance or support services, iii) data entry or processing, or iv) contract administration services (e.g., billing, invoicing, claim processing), Contractor warrants that services shall be provided in an accurate and timely manner without interruption, failure or error due to the inaccuracy of Contractor's business operations in processing date/time data (including, but not limited to, calculating, comparing, and sequencing) various date/time transitions, including leap year calculations. Contractor shall be responsible for damages resulting from any delays, errors or untimely performance resulting therefrom, including but not limited to the failure or untimely performance of such services.

This Date/Time Warranty shall survive beyond termination or expiration of this contract through: a) ninety (90) days or b) the Contractor's or Product manufacturer/developer's stated date/time warranty term, whichever is longer. Nothing in this warranty statement shall be construed to limit any rights or remedies otherwise available under this Contract for breach of warranty.

h. Workmanship Warranty Contract warrants that all components or deliverables specified and furnished by or through Contractor under the Project Definition/Work Order meet the completion criteria set forth in the Project Definition/Work Order and any subsequent statement(s) of work, and that services will be provided in a workmanlike manner in accordance with industry standards.

i. Survival of Warranties All warranties contained in this Contract shall survive the termination of this Contract.

73. LEGAL COMPLIANCE Contractor represents and warrants that it shall secure all notices and comply with all laws, ordinances, rules and regulations of any governmental entity in conjunction with the performance of obligations under the Contract. Prior to award and during the Contract term and any renewals thereof, Contractor must establish to the satisfaction of the Commissioner that it meets or exceeds all requirements of the Bid and Contract and any applicable laws, including but not limited to, permits, licensing, and shall provide such proof as required by the Commissioner. Failure to comply or failure to provide proof may constitute grounds for the Commissioner to cancel or suspend the Contract, in whole or in part, or to take any other action deemed necessary by the Commissioner. Contractor also agrees to disclose information and provide affirmations and certifications to comply with Sections 139-j and 139-k of the State Finance Law.

74. INDEMNIFICATION Contractor shall be fully liable for the actions of its agents, employees, partners or Subcontractors and shall fully indemnify and save harmless the Authorized Users from suits, actions, damages and costs of every name and description relating to personal injury and damage to real or personal tangible property caused by any intentional act or negligence of Contractor, its agents, employees, partners or Subcontractors, without limitation; provided, however, that the Contractor shall not indemnify for that portion of any claim, loss or damage arising hereunder due to the negligent act or failure to act of the Authorized Users.

75. INDEMNIFICATION RELATING TO THIRD PARTY RIGHTS The Contractor will also indemnify and hold the Authorized Users harmless from and against any and all damages, expenses (including reasonable attorneys' fees), claims, judgments, liabilities and costs that may be finally assessed against the Authorized Users in any action for infringement of a United States Letter Patent, or of any copyright, trademark, trade secret or other third party proprietary right except to the extent such claims arise from the Authorized Users gross negligence or willful misconduct, provided that the State shall give Contractor: (i) prompt written notice of any action, claim or threat of infringement suit, or other suit, (ii) the opportunity to take over, settle or defend such action, claim or suit at Contractor's sole expense, and (iii) assistance in the defense of any such action at the expense of Contractor.

If usage shall be enjoined for any reason or if Contractor believes that it may be enjoined, Contractor shall have the right, at its own expense and sole discretion to take action in the following order of precedence: (i) to procure for the Authorized User the right to continue Usage (ii) to modify the service or Product so that Usage becomes non-infringing, and is of at least equal quality and performance; or (iii) to replace said service or Product or part(s) thereof, as applicable, with non-infringing service or Product of at least equal quality and performance. If the above remedies are not available, the parties shall terminate the Contract, in whole or in part as necessary and applicable, provided the Authorized User is given a refund for any amounts paid for the period during which Usage was not feasible.

The foregoing provisions as to protection from third party rights shall not apply to any infringement occasioned by modification by the Authorized User of any Product without Contractor's approval.

In the event that an action at law or in equity is commenced against the Authorized User arising out of a claim that the Authorized User's use of the service or Product under the Contract infringes any patent, copyright or proprietary right, and Contractor is of the opinion that the allegations in such action in whole or in part are not covered by the indemnification and defense provisions set forth in the Contract, Contractor shall immediately notify the Authorized User and the Office of the Attorney General in writing and shall specify to what extent Contractor believes it is obligated to defend and indemnify under the terms and conditions of the Contract. Contractor shall in such event protect the interests of the Authorized User and secure a continuance to permit the Authorized User to appear and defend its interests in cooperation with Contractor, as is appropriate, including any jurisdictional defenses the Authorized User may have. This constitutes the Authorized User's sole and exclusive remedy for patent infringement, or for infringement of any other third party proprietary right.

76. LIMITATION OF LIABILITY Except as otherwise set forth in the Indemnification Paragraphs above, the limit of liability shall be as follows:

a. Contractor's liability for any claim, loss or liability arising out of, or connected with the Products and services provided, and whether based upon default, or other liability such as breach of contract, warranty, negligence, misrepresentation or otherwise, shall in no case exceed direct damages in: (i) an amount equal to two (2) times the charges specified in the Purchase Order for the Products and services, or parts thereof forming the basis of the Authorized User's claim, (said amount not to exceed a total of twelve (12) months charges payable under the applicable Purchase Order) or (ii) one million dollars ($1,000,000), whichever is greater.

b. The Authorized User may retain such monies from any amount due Contractor as may be necessary to satisfy any claim for damages, costs and the like asserted against the Authorized User unless Contractor at the time of the presentation of claim shall demonstrate to the Authorized User's satisfaction that sufficient monies are set aside by the Contractor in the form of a bond or through insurance coverage to cover associated damages and other costs.

c. Notwithstanding the above, neither the Contractor nor the Authorized User shall be liable for any consequential, indirect or special damages of any kind which may result directly or indirectly from such performance, including, without limitation, damages resulting from loss of use or loss of profit by the Authorized User, the Contractor, or by others.

77. INSURANCE Contractor shall secure and maintain insurance coverage as specified in the Bid Documents and shall promptly provide documentation of specified coverages to the Authorized User. If specified, the Contractor may be required to add the Authorized User as an additional insured.

THE FOLLOWING CLAUSES PERTAIN TO TECHNOLOGY & NEGOTIATED CONTRACTS

78. SOFTWARE LICENSE GRANT Where Product is acquired on a licensed basis the following shall constitute the license grant:

a. License Scope Licensee is granted a non-exclusive, perpetual license to use, execute, reproduce, display, perform, or merge the Product within its business enterprise in the United States up to the maximum licensed capacity stated on the Purchase Order. Product may be accessed, used, executed, reproduced, displayed or performed up to the capacity measured by the applicable licensing unit stated on the Purchase Order (i.e., payroll size, number of employees, CPU, MIPS, MSU, concurrent user, workstation). Licensee shall have the right to use and distribute modifications or customizations of the Product to and for use by any Authorized Users otherwise licensed to use the Product, provided that any modifications, however extensive, shall not diminish Licensor's proprietary title or interest. No license, right or

interest in any trademark, trade name, or service mark is granted hereunder.

b. License Term The license term shall commence upon the License Effective Date, provided, however, that where an acceptance or trial period applies to the Product, the License Term shall be extended by the time period for testing, acceptance or trial.

c. Licensed Documentation If commercially available, Licensee shall have the option to require the Contractor to deliver, at Contractor's expense: (i) one (1) hard copy and one (1) master electronic copy of the Documentation in a mutually agreeable format; (ii) based on hard copy instructions for access by downloading from the Internet (iii) hard copies of the Product Documentation by type of license in the following amounts, unless otherwise mutually agreed:

- Individual/Named User License - one (1) copy per License
- Concurrent Users - 10 copies per site
- Processing Capacity - 10 copies per site

Software media must be in a format specified by the Authorized User, without requiring any type of conversion.

Contractor hereby grants to Licensee a perpetual license right to make, reproduce (including downloading electronic copies of the Product) and distribute, either electronically or otherwise, copies of Product Documentation as necessary to enjoy full use of the Product in accordance with the terms of license.

d. Product Technical Support & Maintenance Licensee shall have the option of electing the Product technical support and maintenance ("maintenance") set forth in the Contract by giving written notice to Contractor any time during the Centralized Contract term. Maintenance term(s) and any renewal(s) thereof are independent of the expiration of the Centralized Contract term and will not automatically renew.

Maintenance shall include, at a minimum, (i) the provision of error corrections, updates, revisions, fixes, upgrade and new releases to Licensee, and (ii) Help Desk assistance with locally accessible "800" or toll free, local telephone service, or alternatively on-line Help Desk accessibility. Contractor shall maintain the Products so as to provide Licensee with the ability to utilize the Products in accordance with the Product documentation without significant functional downtime to its ongoing business operations during the maintenance term.

Authorized User shall not be required to purchase maintenance for use of Product, and may discontinue maintenance at the end of any current maintenance term upon notice to Contractor. In the event that Authorized User does not initially acquire or discontinues maintenance of licensed Product, it may, at any time thereafter, reinstate maintenance for Product without any additional penalties or other charges, by paying Contractor the amount which would have been due under the Contract for the period of time that such maintenance had lapsed, at then current NYS net maintenance rates.

e. Permitted License Transfers As Licensee's business operations may be altered, expanded or diminished, licenses granted hereunder may be transferred or combined for use at an alternative or consolidated site not originally specified in the license, including transfers between Agencies ("permitted license transfers"). Licensee(s) do not have to obtain the approval of Contractor for permitted license transfers, but must give thirty (30) days prior written notice to Contractor of such move(s) and certify in writing that the Product is not in use at the prior site. There shall be no additional license or other transfer fees due Contractor, provided that: i) the maximum capacity of the consolidated machine is equal to the combined individual license capacity of all licenses running at the consolidated or transferred site (e.g., named users, seats, or MIPS); or ii) if the maximum capacity of the consolidated machine is greater than the individual license capacity being transferred, a logical or physical partition or other means of restricting access will be maintained within the computer system so as to restrict use and access to the Product to that unit of licensed capacity solely dedicated to beneficial use for Licensee. In the event that the maximum capacity of the consolidated machine is greater than the combined individual license capacity of all licenses running at the consolidated or transferred site, and a logical or physical partition or other means of restricting use is not available, the fees due Contractor shall not exceed the fees otherwise payable for a single license for the upgrade capacity.

f. Restricted Use By Outsourcers / Facilities Management, Service Bureaus / or Other Third Parties Outsourcers, facilities management or service bureaus retained by Licensee shall have the right to use the Product to maintain Licensee's business operations, including data processing, for the time period that they are engaged in such activities, provided that: 1) Licensee gives notice to Contractor of such party, site of intended use of the Product, and means of access; and 2) such party has executed, or agrees to execute, the Product manufacturer's standard nondisclosure or restricted use agreement which executed agreement shall be accepted by the Contractor ("Non-Disclosure Agreement"); and 3) if such party is engaged in the business of facility management, outsourcing, service bureau or other services, such third party will maintain a logical or physical partition within its computer system so as to restrict use and access to the program to that portion solely dedicated to beneficial use for Licensee. In no event shall Licensee assume any liability for third party's compliance with the terms of the Non-Disclosure Agreement, nor shall the Non-Disclosure Agreement create or impose any liabilities on the State or Licensee.

Any third party with whom a Licensee has a relationship for a state function or business operation, shall have the temporary right to use Product (e.g., JAVA Applets), provided that such use shall be limited to the time period during which the third party is using the Product for the function or business activity.

g. Archival Back-Up and Disaster Recovery Licensee may use and copy the Product and related Documentation in connection with: i) reproducing a reasonable number of copies of the Product for archival backup and disaster recovery procedures in the event of destruction or corruption of the Product or disasters or emergencies which require Licensee to restore backup(s) or to initiate disaster recovery procedures for its platform or operating systems; ii) reproducing a reasonable number of copies of the Product and related Documentation for cold site storage. "Cold Site" storage shall be defined as a restorable back-up copy of the Product not to be installed until and after the declaration by the Licensee of a disaster; iii) reproducing a back-up copy of the Product to run for a reasonable period of time in conjunction with a documented consolidation or transfer otherwise allowed herein. "Disaster Recovery" shall be defined as the installation and storage of Product in ready-to-execute, back-up computer systems prior to disaster or breakdown which is not used for active production or development.

h. Confidentiality Restrictions The Product is a trade secret, copyrighted and proprietary product. Licensee and its employees will keep the Product strictly confidential, and Licensee will not disclose or otherwise distribute or reproduce any Product to anyone other than as

authorized under the terms of Contract. Licensee will not remove or destroy any proprietary markings of Contractor.

i. Restricted Use by Licensee Except as expressly authorized by the terms of license, Licensee shall not:

(i) Copy the Product;

(ii) Cause or permit reverse compilation or reverse assembly of all or any portion of the Product;

(iii) Export the Licensed Software in violation of any U.S. Department of Commerce export administration regulations.

79. PRODUCT ACCEPTANCE Unless otherwise provided by mutual agreement of the Authorized User and the Contractor, Authorized User(s) shall have thirty (30) days from the date of delivery to accept hardware products and sixty (60) days from the date of delivery to accept all other Product. Where the Contractor is responsible for installation, acceptance shall be from completion of installation. Failure to provide notice of acceptance or rejection or a deficiency statement to the Contractor by the end of the period provided for under this clause constitutes acceptance by the Authorized User(s) as of the expiration of that period. The License Term shall be extended by the time periods allowed for trial use, testing and acceptance unless the Commissioner or Authorized User agrees to accept the Product at completion of trial use.

Unless otherwise provided by mutual agreement of the Authorized User and the Contractor, Authorized User shall have the option to run testing on the Product prior to acceptance, such tests and data sets to be specified by User. Where using its own data or tests, Authorized User must have the tests or representative set of data available upon delivery. This demonstration will take the form of a documented installation test, capable of observation by the Authorized User, and shall be made part of the Contractor's standard documentation. The test data shall remain accessible to the Authorized User after completion of the test.

In the event that the documented installation test cannot be completed successfully within the specified acceptance period, and the Contractor or Product is responsible for the delay, Authorized User shall have the option to cancel the order in whole or in part, or to extend the testing period for an additional thirty (30) day increment. Authorized User shall notify Contractor of acceptance upon successful completion of the documented installation test. Such cancellation shall not give rise to any cause of action against the Authorized User for damages, loss of profits, expenses, or other remuneration of any kind.

If the Authorized User elects to provide a deficiency statement specifying how the Product fails to meet the specifications within the testing period, Contractor shall have thirty (30) days to correct the deficiency, and the Authorized User shall have an additional sixty (60) days to evaluate the Product as provided herein. If the Product does not meet the specifications at the end of the extended testing period, Authorized User, upon prior written notice to Contractor, may then reject the Product and return all defective Product to Contractor, and Contractor shall refund any monies paid by the Authorized User to Contractor therefor. Costs and liabilities associated with a failure of the Product to perform in accordance with the functionality tests or product specifications during the acceptance period shall be borne fully by Contractor to the extent that said costs or liabilities shall not have been caused by negligent or willful acts or omissions of the Authorized User's agents or employees. Said costs shall be limited to the amounts set forth in the Limitation of Liability Clause for any liability for costs incurred at the direction or recommendation of Contractor.

80. AUDIT OF LICENSED PRODUCT USAGE Contractor shall have the right to periodically audit, no more than annually, at Contractor's expense, use of licensed Product at any site where a copy of the Product resides provided that: (i) Contractor gives Licensee(s) at least thirty (30) days advance written notice, (ii) such audit is conducted during such party's normal business hours, (iii) the audit is conducted by an independent auditor chosen on mutual agreement of the parties. Contractor shall recommend a minimum of three (3) auditing/accounting firms from which the Licensee will select one (1). In no case shall the Business Software Alliance (BSA), Software Publishers Association (SPA), Software and Industry Information Association (SIIA) or Federation Against Software Theft (FAST) be used directly or indirectly to conduct audits, or be recommended by Contractor; (iv) Contractor and Licensee are each entitled to designate a representative who shall be entitled to participate, and who shall mutually agree on audit format, and simultaneously review all information obtained by the audit. Such representatives also shall be entitled to copies of all reports, data or information obtained from the audit; and (v) if the audit shows that such party is not in compliance, Licensee shall be required to purchase additional licenses or capacities necessary to bring it into compliance and shall pay for the unlicensed capacity at the NYS Net Price in effect at time of audit, or if none, then at the Contractor's U.S. Commercial list price. Once such additional licenses or capacities are purchased, Licensee shall be deemed to have been in compliance retroactively, and Licensee shall have no further liability of any kind for the unauthorized use of the software.

81. OWNERSHIP/TITLE TO PROJECT DELIVERABLES

a. Definitions

(i) For purposes of this paragraph, "Products." A deliverable furnished under this Contract by or through Contractor, including existing and custom Products, including, but not limited to: a) components of the hardware environment, b) printed materials (including but not limited to training manuals, system and user documentation, reports, drawings), whether printed in hard copy or maintained on diskette, CD, DVD or other electronic media c) third party software, d) modifications, customizations, custom programs, program listings, programming tools, data, modules, components, and e) any properties embodied therein, whether in tangible or intangible form (including but not limited to utilities, interfaces, templates, subroutines, algorithms, formulas, source code, object code).

(ii) For purposes of this paragraph, "Existing Products." Tangible Products and intangible licensed Products that exist prior to the commencement of work under the Contract. Contractor bears the burden of proving that a particular product was in existence prior to the commencement of the Project.

(iii) For purposes of this paragraph, "Custom Products." Products, preliminary, final or otherwise, which are created or developed by Contractor, its Subcontractors, partners, employees or agents for Authorized User under the Contract.

b. Title to Project Deliverables Contractor acknowledges that it is commissioned by the Authorized User to perform the services detailed in the Purchase Order. Unless otherwise specified in writing in the Bid or Purchase Order, the Authorized User shall have ownership and license rights as follows:

(i) Existing Products:

1. Hardware - Title and ownership of Existing Hardware Product shall pass to Authorized User upon Acceptance.

2. Software - Title and ownership to Existing Software Product(s) delivered by Contractor under the Contract that is normally commercially distributed on a license basis by the Contractor or other independent software vendor proprietary owner ("Existing Licensed

Product"), whether or not embedded in, delivered or operating in conjunction with hardware or Custom Products, shall remain with Contractor or the proprietary owner of other independent software vendor(s) (ISV). Effective upon acceptance, such Product shall be licensed to Authorized User in accordance with the Contractor or ISV owner's standard license agreement, provided, however, that such standard license, must, at a minimum: (a) grant Authorized User a non-exclusive, perpetual license to use, execute, reproduce, display, perform, adapt (unless Contractor advises Authorized User as part of Contractor's proposal that adaptation will violate existing agreements or statutes and Contractor demonstrates such to the Authorized User's satisfaction) and distribute Existing Licensed Product to the Authorized User up to the license capacity stated in the Purchase Order or work order with all license rights necessary to fully effect the general business purpose(s) stated in the Bid or Authorized User's Purchase Order or work order, including the financing assignment rights set forth in paragraph (c) below; and (b) recognize the State of New York as the licensee where the Authorized User is a state agency, department, board, commission, office or institution. Where these rights are not otherwise covered by the ISV's owner's standard license agreement, the Contractor shall be responsible for obtaining these rights at its sole cost and expense. The Authorized User shall reproduce all copyright notices and any other legend of ownership on any copies authorized under this paragraph.

(**ii.) Custom Products**: Effective upon creation of Custom Products, Contractor hereby conveys, assigns and transfers to Authorized User the sole and exclusive rights, title and interest in Custom Product(s), whether preliminary, final or otherwise, including all trademark and copyrights. Contractor hereby agrees to take all necessary and appropriate steps to ensure that the Custom Products are protected against unauthorized copying, reproduction and marketing by or through Contractor, its agents, employees, or Subcontractors. Nothing herein shall preclude the Contractor from otherwise using the related or underlying general knowledge, skills, ideas, concepts, techniques and experience developed under a Purchase Order, project definition or work order in the course of Contractor's business. Authorized User may, by providing written notice thereof to the Contractor, elect in the alternative to take a non-exclusive perpetual license to Custom Products in lieu of Authorized User taking exclusive ownership and title to such Products. In such case, Licensee on behalf of all Authorized Users shall be granted a non-exclusive perpetual license to use, execute, reproduce, display, perform, adapt and distribute Custom Product as necessary to fully effect the general business purpose(s) as stated in paragraph (b)(i)(2), above.

c. Transfers or Assignments to a Third Party Financing Agent It is understood and agreed by the parties that a condition precedent to the consummation of the purchase (s) under the Contract may be the obtaining of acceptable third party financing by the Authorized User. The Authorized User shall make the sole determination of the acceptability of any financing proposal. The Authorized User will make all reasonable efforts to obtain such financing, but makes no representation that such financing has been obtained as of the date of Bid receipt. Where financing is used, Authorized User may assign or transfer its rights in Licensed Products (existing or custom) to a third party financing entity or trustee ("Trustee") as collateral where required by the terms of the financing agreement. Trustee's sole rights with respect to transferability or use of Licensed Products shall be to exclusively sublicense to Authorized User all of its Licensee's rights under the terms and conditions of the License Agreement; provided, further, however, in the event of any termination or expiration of such sublicense by reason of payment in full, all of Trustee's rights in such Licensed Product shall terminate immediately and Authorized User's prior rights to such Existing Licensed Product shall be revived.

d. Sale or License of Custom Products Involving Tax-Exempt Financing (i.e., Certificates of Participation - COPS) The Authorized User's sale or other transfer of Custom Products which were acquired by the Authorized User using third party, tax-exempt financing may not occur until such Custom Products are, or become, useable. In the event that the Contractor wishes to obtain ownership rights to Custom Product(s), the sale or other transfer shall be at fair market value determined at the time of such sale or other transfer, and must be pursuant to a separate written agreement in a form acceptable to the Authorized User which complies with the terms of this paragraph.

e. Contractor's Obligation with Regard to ISV (Third Party) Product Where Contractor furnishes Existing Licensed Product(s) as a Project Deliverable, and sufficient rights necessary to effect the purposes of this section are not otherwise provided in the Contractor or ISV's standard license agreement, Contractor shall be responsible for obtaining from the ISV third party proprietary owner/developer the rights set forth herein to the benefit of the Authorized User at Contractor's sole cost and expense.

82. PROOF OF LICENSE The Contractor must provide to each Licensee who places a Purchase Order either: (i) the Product developer's certified License Confirmation Certificates in the name of such Licensee; or (ii) a written confirmation from the Proprietary owner accepting Product invoice as proof of license. Contractor shall submit a sample certificate, or alternatively such written confirmation from the proprietary developer. Such certificates must be in a form acceptable to the Licensee.

83. PRODUCT VERSION Purchase Orders shall be deemed to reference Manufacturer's most recently released model or version of the Product at time of order, unless an earlier model or version is specifically requested in writing by Authorized User and Contractor is willing to provide such version.

84. CHANGES TO PRODUCT OR SERVICE OFFERINGS

a. Product or Service Discontinuance Where Contractor is the Product Manufacturer/Developer, and Contractor publicly announces to all U.S. customers ("date of notice") that a Product is being withdrawn from the U.S. market or that maintenance service or technical support provided by Contractor ("withdrawn support") is no longer going to be offered, Contractor shall be required to: (i) notify the Commissioner, each Licensee and each Authorized User then under contract for maintenance or technical support in writing of the intended discontinuance; and (ii) continue to offer Product or withdrawn support upon the Contract terms previously offered for the greater of: a) the best terms offered by Contractor to any other customer, or b) not less than twelve (12) months from the date of notice; and (iii) at Authorized User's option, provided that the Authorized User is under contract for maintenance on the date of notice, either: provide the Authorized User with a Product replacement or migration path with at least equivalent functionality at no additional charge to enable Authorized User to continue use and maintenance of the Product.

In the event that the Contractor is not the Product Manufacturer, Contractor shall be required to: (i) provide the notice required under the paragraph above, to the entities described within five (5) business days of Contractor receiving notice from the Product Manufacturer, and (ii) include in such notice the period of time from the date of notice that the Product Manufacturer will continue to provide Product or withdraw support.

The provisions of this subdivision (a) shall not apply or eliminate Contractor's obligations where withdrawn support is being provided by an independent Subcontractor. In the event that such Subcontractor

ceases to provide service, Contractor shall be responsible for subcontracting such service, subject to state approval, to an alternate Subcontractor.

b. **Product or Service Re-Bundling** In the event that Contractor is the Product manufacturer and publicly announces to all U.S. customers ("date of notice") that a Product or maintenance or technical support offering is being re-bundled in a different manner from the structure or licensing model of the prior U.S. commercial offering, Contractor shall be required to: (i) notify the State and each Authorized User in writing of the intended change; (ii) continue to provide Product or withdrawn support upon the same terms and conditions as previously offered on the then-current NYS Contract for the greater of: a) the best terms offered by Contractor to any other customer, or b) not less than twelve (12) months from the date of notice; and (iii) shall submit the proposed rebundling change to the Commissioner for approval prior to its becoming effective for the remainder of the Contract term. The provisions of this section do not apply if the Contractor is not the Product manufacturer.

85. NO HARDSTOP/PASSIVE LICENSE MONITORING Unless an Authorized User is otherwise specifically advised to the contrary in writing at the time of order and prior to purchase, Contractor hereby warrants and represents that the Product and all Upgrades do not and will not contain any computer code that would disable the Product or Upgrades or impair in any way its operation based on the elapsing of a period of time, exceeding an authorized number of copies, advancement to a particular date or other numeral, or other similar self-destruct mechanisms (sometimes referred to as "time bombs," "time locks," or "drop dead" devices) or that would permit Contractor to access the Product to cause such disablement or impairment (sometimes referred to as a "trap door" device). Contractor agrees that in the event of a breach or alleged breach of this provision that Authorized User shall not have an adequate remedy at law, including monetary damages, and that Authorized User shall consequently be entitled to seek a temporary restraining order, injunction, or other form of equitable relief against the continuance of such breach, in addition to any and all remedies to which Authorized User shall be entitled.

86. SOURCE CODE ESCROW FOR LICENSED PRODUCT If Source Code or Source Code escrow is offered by either Contractor or Product manufacturer or developer to any other commercial customers, Contractor shall either: (i) provide Licensee with the Source Code for the Product; or (ii) place the Source Code in a third party escrow arrangement with a designated escrow agent who shall be named and identified to the State, and who shall be directed to release the deposited Source Code in accordance with a standard escrow agreement acceptable to the State; or (iii) will certify to the State that the Product manufacturer/developer has named the State, acting by and through the Authorized User, and the Licensee, as a named beneficiary of an established escrow arrangement with its designated escrow agent who shall be named and identified to the State and Licensee, and who shall be directed to release the deposited Source Code in accordance with the terms of escrow. Source Code, as well as any corrections or enhancements to such source code, shall be updated for each new release of the Product in the same manner as provided above and such updating of escrow shall be certified to the State in writing. Contractor shall identify the escrow agent upon commencement of the Contract term and shall certify annually that the escrow remains in effect in compliance with the terms of this paragraph.

The State may release the Source Code to Licensees under this Contract who have licensed Product or obtained services, who may use such copy of the Source Code to maintain the Product.

FOR NEGOTIATED CONTRACTS THE FOLLOWING CLAUSES ARE RESERVED BECAUSE BIDDING DOES NOT APPLY:

Clauses: 7, 8, 9, 10, 11, 12, 13, 16, 15, 21, 25, 26, 28, 29, 30, 31, 32, 33, 36, 49, 50, 52, 54 and 37

INDEX

	Paragraph No.
A	
Additional Warranties	72
Advertising Results	20
Applicability	1
Assignment	56
Assignment of Claim	66
Audit of Licensed Product Usage	80
Authentication of Facsimile Bids	10
B	
Bid Contents	12
Bid Evaluation	29
Bid Opening	7
Bid Submission	8
C	
Changes to Product or Service Offerings	84
Clarification/Revisions	31
Confidential/Trade Secret Materials	14
Conflict of Terms	4
Conditional Bid	30
Contract Billings	62
Contract Creation/Execution	38
Contract Term - Renewal	71
Cooperation with Third Parties	70
D	
Default - Authorized User	63
Definitions	5
Disqualification for Past Performance	35
Drawings	25
E	
Emergency Contracts	43
Employees/Subcontractors/Agents	55
Equivalent or Identical Bids	33
Estimated/Specific Quantity Contracts	42
Ethics Compliance	3
Expenses Prior to Contract Execution	19
Extraneous Terms	13
F	
Facsimile Submissions	9
Freedom of Information Law	16
G	
Governing Law	2
I	
Indemnification	74
Indemnification Relating to Third Party Rights	75
Independent Contractor	68
Installation	52
Insurance	77
Interest on Late Payments	64
International Bidding	6
L	
Late Bids	11
Legal Compliance	73
Limitation of Liability	76

	Paragraph No.
M	
Modification of Contract Terms	40
N	
No Hardstop/Passive License Monitoring	85
O	
On-Site Storage	54
Ownership/Title to Project Deliverables	81
P	
Participation in Centralized Contracts	39
Performance and Responsibility Qualifications	34
Performance/Bid Bond	58
Prevailing Wage Rates Public Works & Building Services Contracts	17
Pricing	24
Procurement Card	27
Product Acceptance	79
Product Delivery	45
Product References	21
Product Substitution	50
Product Version	83
Products Manufactured in Public Institutions	23
Prompt Payment Discounts	32
Proof of License	82
Purchase Orders	44
Q	
Quantity Changes Prior to Award	36
R	
Rejected Product	51
Release of Bid Evaluation Materials	15
Re-Weighing Product	49
Remanufactured, Recycled, Recyclable or Recovered Materials	22
Remedies for Breach	65
Repaired or Replaced Product/Components	53
S	
Samples	28
Savings/Force Majeure	61
Scope Changes	41
Security	69
Site Inspection	26
Shipping/Receipt of Product	47
Software License Grant	78
Source Code Escrow for Licensed Product	86
Subcontractors and Suppliers	57
Suspension of Work	59
T	
Taxes	18
Termination	60
Timeframe for Offers	37
Title and Risk of Loss	48
Toxic Substances	67
W	
Weekend and Holiday Deliveries	46

Appendix C

Light Duty Vehicles Including Law Enforcement (Statewide) Documents:

Number 1, Awarded Items

Number 2, Price Pages

Number 3, Report of Contract Usage

Number 4, Contractor Information

Number 5, Contractor Insurance Requirements

Appendix C, Number 1, Awarded Items

Lot #, Item #	Item Description	Vehicle
Lot V, Item 7	Chevrolet Caprice (1EW19) 4dr Police Patrol Vehicle	Chevrolet Caprice (1EW19)

Appendix C, Number 2, Price Pages

Lot V: Item 7

Vehicle Description	Chevrolet Caprice (1EW19) 4dr Police Patrol Vehicle
Year / Make / Model	2014 Chevrolet Caprice (1EW19)
Contractor	Joe Basil Chevrolet Inc.
Unit Price	$36,088.64
Option Discount	15.00%
DOT Option Package Price	N/A
Pickup Credit (per vehicle)	$0.00

Vehicle Base Specifications	
Note: The actual vehicle awarded may exceed the minimum specifications stated below. The Authorized User may elect to add additional Options, delete Options, or substitute a vehicle feature that is an Option with another Option. See Contract Section III.6 Options.	
Equipment	As standard for 1EW19, unless specified below
Preferred Equipment Pkg.	Police (Option 1SB)
Engine	6.0L 8 cylinder SFI (Option L77)
Transmission	6-Speed Automatic (MX0)
	Limited Slip Differential (Option G80)
Wheels	18" Heavy-Duty Steel (RT3)
Tires	P235/50R18 AS BW (R5M)
	Full-Size Spare Wheel & Tire (Option SG8)
Seats	Front Bucket Seats w/Vinyl Rear Bench (Option HCQ)
Other Options	Monotone Paint Application (Paint)
	Police Package (Option 9C1)
	Radio: AM/FM Stereo w/CD Player & MP3 Playback (UFU)
	Head Curtain Side-Impact Air Bags (Option AYG)
	6 Cut Keys (Option AMF)
	Red & White Front Auxiliary Dome Lighting (Option 6C7)
	Inoperative Inside Rear Door Locks & Handles (Option 6N6)
	6N5 Inoperative Rear-Window Switches (Option 6N5)
	130mph Top Speed Limiter (Option SGT)
	Grille Lamps & Siren Speaker Wiring (Option 6J3)
	6J4 Horn & Siren Circuit Wiring (Option 6J4)
	DRL Compatible Headlamp & Taillamp Flasher System (Option 6J7)
	Outside Heated Power-Adjustable Mirrors (Option DR9)

Lot V: Item 7 Cont.

Interior Color	Jet Black (Option 4AA)
Exterior Color	Phantom Black Metallic (Option GIE)
Emissions	CT/DE/ME/MD/MA/NJ/NY/OR/PA/RI/VT/WA Emissions Req (Option NE1)
Special Equipment	The following additional Special Equipment Option Package will be provided by KERR INDUSTRIES and factory installed on the vehicle prior to delivery:
	KERR OPTION PACKAGE: KT-NYSP-2014-9C1
	Bidding dealers can contact Mr. Brad Baker: 1-800-585-1774, Kerr Industries for Special Equipment Option Package pricing.

Appendix C, Number 3, Report of Contract Usage

DO NOT ADD, REMOVE OR REARRANGE ANY COLUMNS OR ROWS.

Please fill in the required supplier information below.

Required Information	Answer
Supplier Name	
Supplier Award areas (lots and items)	
Address Line 1	
Address Line 2	
City	
State	
Zip Code	
Contact Name	
Email Address	
Phone Number	
Contract Number	

The chart below provided definitions for the columns listed in the data collection tabs. Please use this as a reference when populating these tabs.

Column	Definition	Comment/Example
Invoice #	Invoice number	
Invoice Date	Date of invoice	
PO #	Purchase order number	
Contract #	New York State contract number	
Agency/State Entity/Municipality	New York State agency/entity or municipality	Ex: Dept of Transpiration, Dept of Correctional Services, Rockland County, SUNY Buffalo
Region/Facility/Location Name	Region, facility, or location associated with the agency or entity	Ex: DOT District 2, Adirondack Correctional Facility
VIN #	Vehicle Identification Number of each vehicle sold	
Manufacturer	Name of manufacturer of vehicle	Ex. Ford, GM
Make	Vehicle make	Ex. Chevrolet, GMC, Buick, Ford, Mercury, etc.
Model	Vehicle model	Ex. Tahoe, Fusion, Impala, etc.
Model Level	Model level of vehicle purchased	Ex. Cargo, Passenger, XL, Limited
Model Year	Model year of vehicle purchased	Ex. 2010
Color	Vehicle color	
Vehicle Type	Type of vehicle purchased	Ex. Compact, Mid-Size, RWD SUV, etc.
Base Vehicle Cost	Contract price for base vehicle excluding any options	
Options	List any options purchased for the vehicle, please list all options in subsequent rows	
Options Discount	Discount given on options purchased	
Net Options Cost	Total net cost for options purchased	
Non-OEM Equipment	List any non-OEM equipment installed	
Non-OEM Equipment Cost	Total cost for any non-OEM equipment purchased	
Unit Price	Price for entire vehicle including options	
Delivery Cost (Per Unit)	Delivery cost per unit	
Extended Cost	Total Cost	*Base Vehicle Cost + Net Options Cost + Non-OEM Equipment Cost + Delivery Cost*
County Ship To	County to which vehicle was delivered	
Ship To Street Address	Ship To Street Address	
Ship To Zip Code	Ship To Zip Code	

Spend Report Spreadsheet - Vehicle Data

DO NOT ADD, REMOVE OR REARRAGE ANY COLUMNS OR ROWS.

Invoice #	Invoice Date	PO #	Contract #	Contract Item Number	State Agency/Entity	Region/Facility/Location Name	VIN #	Manufacturer	Make	Model
1234	12/1/2012	7891011	PC12345	1	Office of General Services	Albany	11223344556677889	Ford	Ford	Fusion

Model #	Model Year	Factory Invoice Price	Dealer Holdback Amount	Manufacturer's Bid Assistance	Vehicle Price	Options Cost	Extended Cost	Ship To Street Address	Ship To Region	Ship To Zip Code
	2013	$ 25,000.00	$ 600.00	$ 2,000.00	$ 22,400.00	$ 15,000.00	$ 37,400.00	1234 Park Ave	1	12242
							$ -			
							$ -			
							$ -			
							$ -			
							$ -			
							$ -			
							$ -			
							$ -			
							$ -			
							$ -			
							$ -			
							$ -			
							$ -			
							$ -			
							$ -			

Spend Report Spreadsheet - Option Data

DO NOT ADD, REMOVE OR REARRAGE ANY COLUMNS OR ROWS.

Contract Number	Contract Item Number	Total Items Purchased	Manufacturer	Make	Model	Model #	VIN#	Model Year	Option Code
PC12345	1	1	Ford	Ford	Fusion		11223344556677889	2013	A51

Option Description	Quantity of Options Purchased	Option Unit Price	Total Option Price
Tinted Windows	1	$ 40.00	$ 40.00
			$ -
			$ -
			$ -
			$ -
			$ -
			$ -
			$ -
			$ -
			$ -
			$ -
			$ -
			$ -
			$ -
			$ -
			$ -

Appendix D, Number 4, Contractor Information

Non-OEM Providers

Kerr Industries
Whelen Engineering
TruckVault
Unicell
VPS Marketing Graphics Group

Payment/Ordering Information

Does Contractor have a contract with the General Services Administration (GSA) or Veteran's Affairs (VA) for products offered?	No
If Yes, will Contractor offer NYS pricing equal to or better than GSA or VA pricing?	N/A
Does Contractor offer Prompt Payment Discounts?	No
Does Contractor offer Electronic Access Ordering (EDI)?	No

Contact Information for Ordering, Expedited Ordering, Contract Administration and Emergencies Occurring after Business Hours

Company Name:	Joe Basil Chevrolet Inc.
Contact Name:	Michael Hopkins
Phone Number:	(716) 206-1746
Fax Number:	(716) 685-1746
Address:	5111 Transit Road
City, State, Zip:	Depew, NY 14043
E-Mail:	michaelh@joebasilchevrolet.com

Appendix D, Number 5, Contractor Insurance Requirements

The Contractor shall procure at its sole cost and expense, and shall maintain in force at all times during the term of this Contract, policies of insurance as herein below set forth, written by companies licensed or authorized by the New York State Department of Financial Services to issue insurance in the State of New York ("Admitted Carriers") with an A.M. Best Company rating of "A-" Class "VII" or better. If during the term of the policy, a carrier's rating falls below "A-" Class "VII", the insurance must be replaced no later than the renewal date of the policy with an insurer rated at least "A-" Class "VII" in the most recently published Best's Insurance Report.

The Contractor shall deliver to OGS evidence of such policies in a form acceptable to OGS. These policies must be written in accordance with the requirements of the paragraphs below, as applicable. Acceptance and/or approval by OGS does not and shall not be construed to relieve Contractor of any obligations, responsibilities or liabilities under the Contract.

General Conditions

A. Conditions Applicable to Insurance. All policies of insurance required by this Contract must meet the following requirements:

1. Coverage Types and Policy Limits. The types of coverage and policy limits required from the Contractor are specified in Paragraph B *Insurance Requirements* below.

2. Policy Forms. Except as may be otherwise specifically provided herein or agreed to in writing by OGS, policies must be written on an occurrence basis.

3. Certificates of Insurance/Notices. Contractor shall provide a Certificate or Certificates of Insurance, in a form satisfactory to OGS, upon tentative award and within three (3) business days of request. Certificates shall reference the Contract Number. **ALL OF THE ABOVE REFERENCED FORMS, EXCEPT CE-200, SI-12 & DB-155 MUST NAME**: The Office of General Services, Procurement Services Group, 38th floor, Corning Tower, Albany NY 12242 as the Entity Requesting Proof of Coverage (Entity being listed as the Certificate Holder). Certificates shall be submitted to the Office of General Services, Procurement Services Group, Corning Tower- 38th Floor, Empire State Plaza, Albany, NY 12242.

Unless otherwise agreed, policies shall be written so as to include a provision that the policy will not be canceled, materially changed, or not renewed without at least thirty (30) days prior written notice except for non-payment as required by law to OGS. The Contractor shall not take any action, or omit to take any action that would suspend or invalidate any of the required coverages during the period of time such coverages are required to be in effect. Not less than thirty (30) days prior to the expiration date or renewal date, the Contractor shall supply OGS updated replacement Certificates of Insurance, and amendatory endorsements.

Certificates of Insurance shall:

a. Be in the form approved by OGS.
b. Disclose any deductible, self-insured retention, aggregate limit or any exclusion to the policy that materially changes the coverage required by the contract.
c. Specify the Additional Insured and Named Insured as required herein.
d. Refer to this Contract by number and any other attachments on the face of the certificate, and
e. Be signed by an authorized representative of the insurance carrier or producer.

Only original documents (Certificates of Insurance and other attachments) will be accepted.

4. ***Primary Coverage.*** All insurance policies shall provide that the required coverage shall apply on a primary and not on an excess or contributing basis as to any other insurance that may be available to OGS or any Authorized User for any claim arising from the Contractor 's work under this Contract, or as a result of the Contractor's activities. Any other insurance maintained by OGS or any Authorized User shall be excess of and shall not contribute with the Contractor's insurance regardless of the "other insurance" clause contained in OGS or the Authorized User's own policy of insurance.

5. ***Policy Renewal/Expiration.*** At least thirty (30) days prior to the expiration of any policy required by this Contract, evidence of renewal or replacement policies of insurance with terms no less favorable to OGS than the expiring policies shall be delivered to OGS in the manner required for service of notice in Paragraph A.3. *Certificates of Insurance/Notices* above. If, at any time during the term of this Contract, the coverage provisions and limits of the policies required herein do not meet the provisions and limits set forth in the Contract or proof thereof is not provided to OGS, the Contractor shall immediately cease work. The Contractor shall not resume work until authorized to do so by OGS. Any delay, time lost, or additional cost incurred as a result of the Contractor not having insurance required by the Contract or not providing proof of same in a form acceptable to OGS, shall not give rise to a delay claim or any other claim against OGS. Should the Contractor fail to provide or maintain any insurance required by this Contract, or proof thereof is not provided, OGS or Authorized Users may withhold further contract payments, treat such failure as a breach or default of the contract.

6. ***Self-Insured Retention/Deductibles.*** Certificates of Insurance must indicate the applicable deductible/self insured retention on each policy. Deductibles or self-insured retentions above $100,000 are subject to approval from OGS. The Contractor shall be solely responsible for all claim expenses and loss payments within the deductible or self-insured retention.

7. ***Subcontractors.*** Should the Contractor engage a Subcontractor, the Contractor shall require all Subcontractors, prior to commencement of an agreement between Contractor and the Subcontractor, to secure and keep in force during the term of this contract the insurance requirements of this document on the Subcontractor, as applicable. Required insurance limits should be determined commensurate with the work of the Subcontractor. Proof thereof shall be supplied to OGS.

All insurance required by the Contract shall name The People of the State of New York, its officers, agents, and employees as additional insured hereunder General Liability Additional Insured Endorsement shall be on Insurance Service Office's (ISO) form number **CG 20 26 11 85** or the equivalent. Additional Insured Endorsements shall be provided upon tenantive award and within three (3) days of request. The additional insured requirement does not apply to Workers Compensation, Disability or Professional Liability coverage.

B. Insurance Requirements: The Contractor, throughout the term of this Contract, or as otherwise required by this Contract, shall obtain and maintain in full force and effect, the following insurance with limits not less than those described below and as required by the terms of this Contract, or as required by law, whichever is greater (limits may be provided through a combination of primary and umbrella/excess policies):

a) Commercial General Liability Insurance with a limit of not less than **$2,000,000.00** each occurrence. Such liability shall be written on the ISO occurrence form **CG 00 01 01 96**, or a substitute form providing equivalent coverages and shall cover liability arising from premises operations, independent contractors, products-completed operations, broad form property damage, personal & advertising injury, cross liability coverage, liability assumed in a contract (including the tort liability of another assumed in a contract) and explosion, collapse & underground coverage.

1. For construction contracts only, if such insurance contains an aggregate limit, it shall apply separately on a per job basis. Policy shall include bodily injury, property damage and broad form contractual liability coverage.
2. General Aggregate $2,000,000
3. Products – Completed Operations Aggregate $1,000,000
4. Personal and Advertising Injury $1,000,000
5. Each Occurrence $2,000,000

Coverage shall include, but not be limited to, the following:

- premises liability,
- independent contractors,
- blanket contractual liability, including tort liability of another assumed in a contract,
- defense and/or indemnification obligations, including obligations assumed under this contract,
- cross liability for additional insureds
- products/completed operations for a term of no less than 3 years, commencing upon acceptance of the work, as required by the contract
- explosion, collapse, and underground hazards,
- contractor means and methods.

The following ISO forms must be endorsed to the policy:

a. CG 00 01 01 96 or an equivalent – Commercial General Liability Coverage Form

b. CG 20 10 11 85 or an equivalent – Additional Insured-Owner, Lessees or Contractors (Form B)

c. Waiver of Subrogation Endorsement.

Limits may be provided through a combination of primary and umbrella/excess liability policies. The CGL aggregate shall be endorsed to apply on a per project basis for construction contracts.

Policies shall be endorsed to name The People of the State of New York and the New York State Office of General Services as Additional Insureds, and such coverage shall be extended to afford Additional Insured status to those entities during the Products/Completed Operations term.

The CGL policy, and any umbrella/excess policies used to meet the " Each Occurrence" limits specified above, must be endorsed to be primary with respects to the coverage afforded the Additional Insureds, and such polic(ies) shall be primary to, and non-contributing with, any other insurance maintained by OGS. Any other insurance maintained by OGS shall be excess of and shall not contribute with the Contractor's or Subcontractor's insurance, regardless of the "Other Insurance" clause contained in either party's policy of insurance.

b) Comprehensive Business Automobile Liability Insurance with a limit of not less than **$2,000,000.00** each accident. Such insurance shall cover liability arising out of any automobile including owned, leased, hired and non owned automobiles.

Waiver of Subrogation. Contractor shall cause to be included in each of its policies insuring against loss, damage or destruction by fire or other insured casualty a waiver of the insurer's right of subrogation against OGS, or, if such waiver is unobtainable (i) an express agreement that such policy shall not be invalidated if Contractor waives or has waived before the casualty, the right of recovery against OGS or (ii) any other form of permission for the release of OGS. A Waiver of Subrogation Endorsement shall be provided upon tentantive award and within three (3) days of request.

C. Workers' Compensation Insurance and Disability Benefits Requirements

Workers' Compensation Law (WCL) §57 & §220 requires the heads of all municipal and state entities to ensure that businesses applying for permits, licenses or contracts document it has appropriate workers' compensation and disability benefits insurance coverage. These requirements apply to both original contracts and renewals, whether the governmental agency is having the work done or is simply issuing the permit, license or contract. Failure to provide proof of such coverage or a legal exemption will result in a rejection of your bid or renewal.

1. Proof of Compliance with Workers' Compensation Coverage Requirements:

An ACORD form is NOT acceptable proof of workers' compensation coverage. In order to provide proof of compliance with the requirements of the Workers' Compensation Law pertaining to workers' compensation coverage, a contractor shall:

A) Be legally exempt from obtaining Workers' Compensation insurance coverage; or
B) Obtain such coverage from an insurance carrier; or
C) Be a Workers' Compensation Board-approved self-insured employer or participate in an authorized self-insurance plan.

A Contractor seeking to enter into a contract with the State of New York shall provide one of the following forms to the Office of General Services at the time of bid submission:

A) Form CE-200, Certificate of Attestation for New York Entities With No Employees and Certain Out of State Entities, That New York State Workers' Compensation and/or Disability Benefits Insurance Coverage is Not Required, which is available on the Workers' Compensation Board's website (www.wcb.state.ny.us); (Reference applicable RFP and Group #s on the form.)
B) Certificate of Workers' Compensation Insurance:
   1) Form C-105.2 (9/07) if coverage is provided by the contractor's insurance carrier, contractor must request its carrier to send this form to the New York State Office of General Services, or
   2) Form U-26.3 if coverage is provided by the State Insurance Fund, contractor must request that the State Insurance Fund send this form to the New York State Office of General Services.
C) Form SI-12, Certificate of Workers' Compensation Self-Insurance available from the New York State Workers' Compensation Board's Self-Insurance Office.
D) Form GSI-105.2, Certificate of Participation in Workers' Compensation Group Self-Insurance available from the contractor's Group Self-Insurance Administrator.

2. Proof of Compliance with Disability Benefits Coverage Requirements:

In order to provide proof of compliance with the requirements of the Workers' Compensation Law pertaining to disability benefits, a contractor shall:

A) Be legally exempt from obtaining disability benefits coverage; or
B) Obtain such coverage from an insurance carrier; or
C) Be a Board-approved self-insured employer.

A Contractor seeking to enter into a contract with the State of New York shall provide one of the following forms to the Office of General Services at the time of bid submission:

A) Form CE-200, Certificate of Attestation for New York Entities With No Employees and Certain Out of State Entities, That New York State Workers' Compensation and/or Disability Benefits Insurance Coverage is Not Required, which is available on the Workers' Compensation Board's website (www.wcb.state.ny.us); (Reference applicable RFP and Group #s on the form.)
B) Form DB-120.1, Certificate of Disability Benefits Insurance. Contractor must request its business insurance carrier to send this form to the New York State Office of General Services; or
C) Form DB-155, Certificate of Disability Benefits Self-Insurance. The Contractor must call the Board's Self-Insurance Office at 518-402-0247 to obtain this form.

Appendix D

Minority and Women-Owned Business Enterprises Equal Employment Opportunity Policy Statement

CONTRACTOR'S EXECUTIVE LAW, ARTICLE 15-A (M/WBE) REQUIREMENTS

MINORITY AND WOMEN-OWNED BUSINESS ENTERPRISES EQUAL EMPLOYMENT OPPORTUNITY POLICY STATEMENT

I, MICHAEL HOPKINS, the SPECIALTY VEHICLE SALES (title) of JOE BASIL CHEVROLET, INC (Contractor) agree that JOE BASIL SHEVROLET, INC (Contractor) has adopted the following policies with respect to Contract Number PC66386

M/WBE

Contractor will make good faith efforts to achieve the M/WBE contract participations goals set by OGS for that area in which the State-funded project is located, by taking the following steps:

(1) Actively and affirmatively soliciting bids for subcontracts from qualified State certified MBEs or WBEs, including solicitations to MWBE contractor associations.
(2) Request a list of State-certified MWBEs from OGS and solicit bids from them directly.
(3) Ensure that plans, specifications, request for proposals and other documents used to secure bids will be made available in sufficient time for review by prospective M/WBEs.
(4) Where feasible, divide the work into smaller portions to enhanced participations by MWBEs and encourage the formation of joint venture and other partnerships among MWBE contractors to enhance their participation.
(5) Document and maintain records of bid solicitation, including those to MWBEs and the results thereof.
(6) Ensure that progress payments to M/WBEs are made on a timely basis so that undue financial hardship is avoided and provide appropriate support, including waiving bonding and other credit requirements where permissible, to encourage MWBE participation.

Agreed to this 9TH day of DECEMBER, 2013

By

Print: MICHAEL HOPKINS

Title: SPECIALTY VEHICLE SALES

EEO

(a) Contractor will not discriminate against any employee or applicant for employment because of race, creed, color, national origin, sex, age, disability or marital status, will undertake or continue existing programs of affirmative action to ensure that minority group members are afforded equal employment opportunities without discrimination, and shall make and document its conscientious and active efforts to employ and utilize minority group members and women in its work force on state contracts.
(b) Contractor shall state in all solicitation or advertisements for employees that in the performance of the State contract all qualified applicants will be afforded equal employment opportunities without discrimination because of race, creed, color, national origin, sex disability or marital status.
(c) At the request of the contracting agency, Contractor shall request each employment agency, labor union, or authorized representative will not discriminate on the basis of race, creed, color, national origin, sex, age, disability or marital status and that such union or representative will affirmatively cooperate in the implementation of Contractor's obligations herein.
(d) Contractor shall comply with the provisions of the Human Rights Law, all other State and Federal statutory and constitutional non-discrimination provisions. Contractor and subcontractors shall not discriminate against any employee or applicant for employment because of race, creed (religion), color, sex, national origin, sexual orientation, military status, age, disability, predisposing genetic characteristic, marital status or domestic violence victim status, and shall also follow the requirements of the Human Rights Law with regard to non-discrimination on the basis of prior criminal conviction and prior arrest.
(e) Contractor will include the provisions of sections (a) through (d) of this agreement in every subcontract in such a manner that the requirements of the subdivisions will be binding upon each subcontractor as to work in connection with the State contract.