Description: Calgon Model 8 Modular Adsorber System (2x 10,000 lb liquid phase granular activated carbon vessels) w/ Custom Heat Blankets

This item is located in Garden City Park, New York.

Description	Modular Adsorber System (2x 10,000 liquid phase GAC vessels) w/ custom heat blankets
Manufacturer	Calgon Carbon Corporation
Manufacture Date	-
Model #	Model 8
Condition	Good
Serial Number/VIN	n/a
Registration Number	n/a
Quantity	1 system (2x vessels)

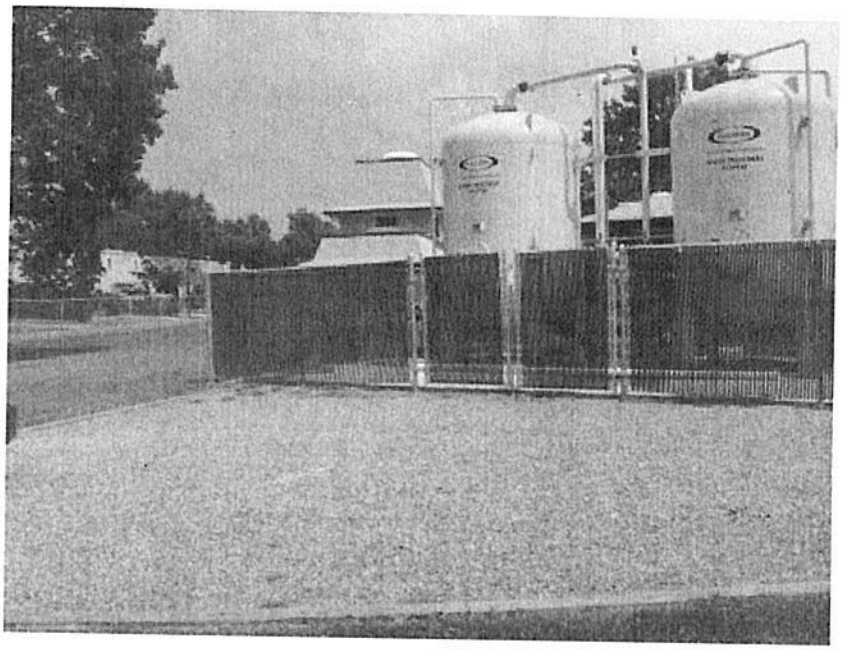

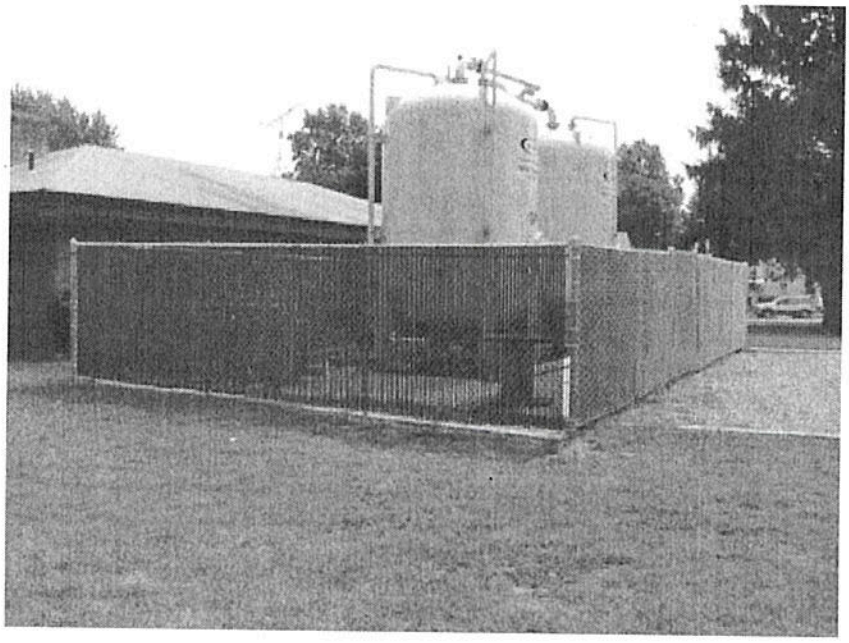

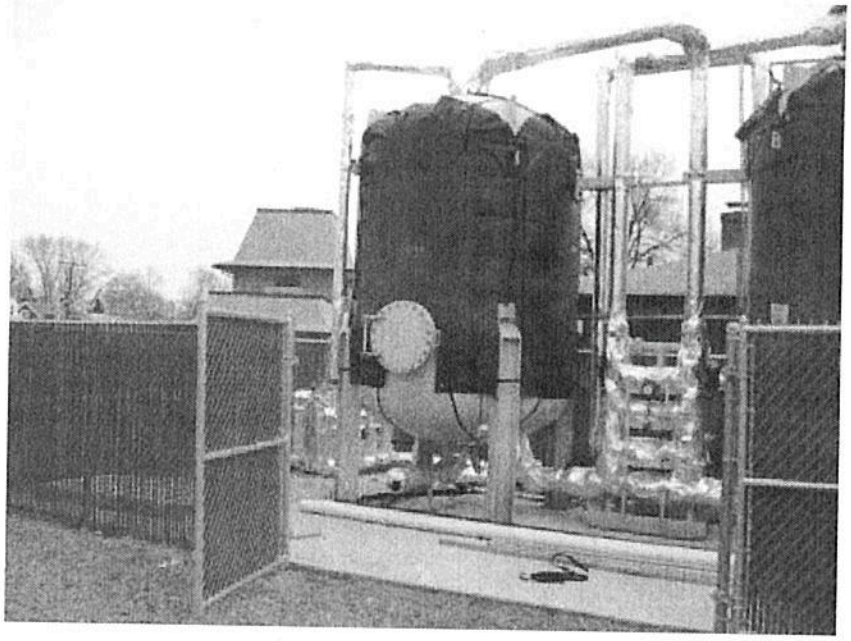

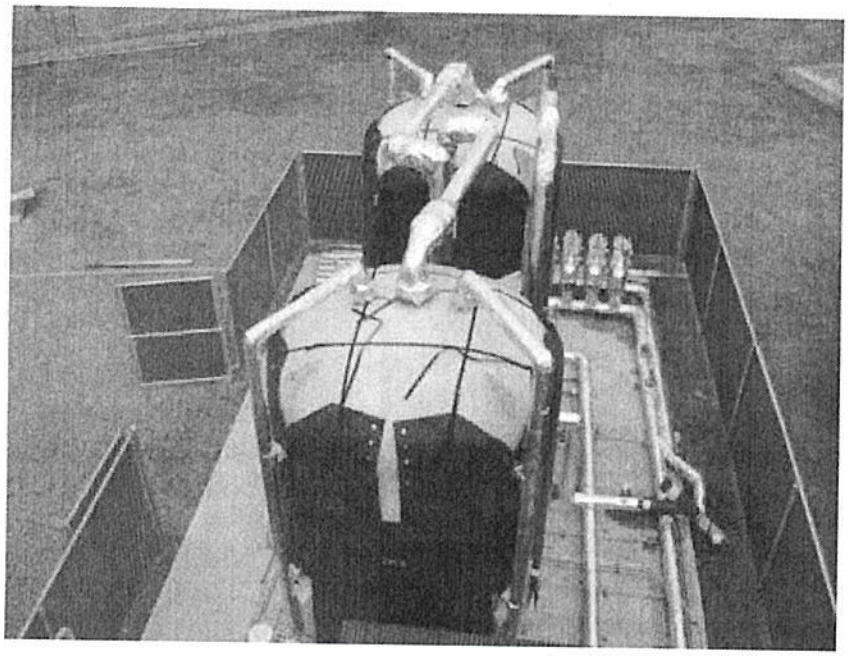

ENVIRONMENTAL ASSESSMENT & REMEDIATIONS

Area Map

Carbon Vessels' Location

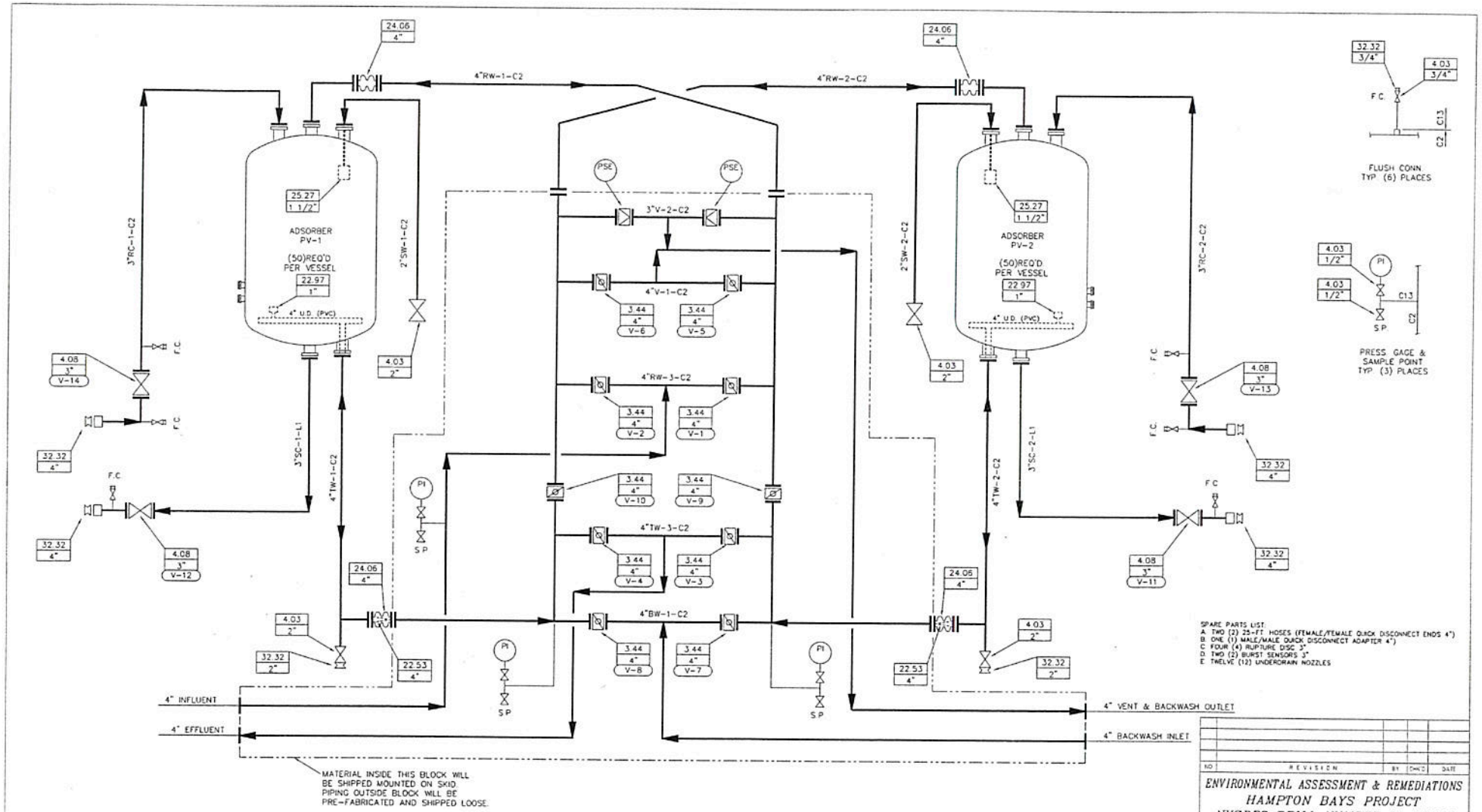

NO	REVISION	BY	CHK'D	DATE

ENVIRONMENTAL ASSESSMENT & REMEDIATIONS
HAMPTON BAYS PROJECT
NYSDEC SPILL NUMBER 01-25324

PLOTTED 9-8-03

INSTRUMENTATION	DESIGN CONDITIONS	LEGEND	ADSORBERS	UTILITY REQUIREMENTS
PI 216 FOR 75# SYSTEM {PSE 252 FOR 60 psig MAX.OPER.PRES.} {WITH BURST SENSOR}	FLOW RATE - 350 GPM MAX. INFLUENT PRESSURE - 60 PSIG MAX. INFLUENT TEMP. - 100°F MAX. BACKWASH RATE - 625 GPM MAX. ELECTRIC POWER - 120 V. 60~ SINGLE PHASE, 15 AMP	BW - BACKWASH WATER FC - FLUSH CONNECTION RC - REACT.(OR VIRGIN) CARBON RW - RAW WATER SC - SPENT CARBON SLURRY SP - SAMPLE PORT TW - TREATED WATER V - VENT SW - SPRAY WATER	8'-0" O.D. x 8'-0" S.S. ASME 2:1 ELLIPTICAL TOP AND BOTTOM HEADS CARBON STEEL CONSTRUCTION. ASME SECT. VIII, DIV. 1 W/ PLASITE 4110 LINING 75 PSIG @ 150°F DESIGN	AIR, CARBON TRANSFER - 100 SCFM @ 30 PSIG MIN. PLANT WATER - 100 GPM @ 30 PSIG MIN

CALGON
CALGON CARBON CORPORATION
P. O. BOX 717 PITTSBURGH, PA. 15230-0717

THIS DRAWING AND DESIGN IS THE PROPERTY OF CALGON CARBON CORPORATION AND IS NOT TO BE REPRODUCED IN WHOLE OR PART NOR EMPLOYED FOR ANY PURPOSE OTHER THAN SPECIFICALLY PERMITTED IN WRITING BY CALGON CARBON CORPORATION. THIS DRAWING LOANED SUBJECT TO RETURN ON DEMAND

PLANT
TITLE MODULAR ADSORBER SYSTEM
8'-0" DIA. VESSEL
4" BACKWASH
FLOW DIAGRAM

DRAWN	CHECKED	APPROVED	SCALE
JFS			N.T.S.

PROJECT LM-03062.HBAY | DRAWING NO. 91-03-4401 | REV. 0

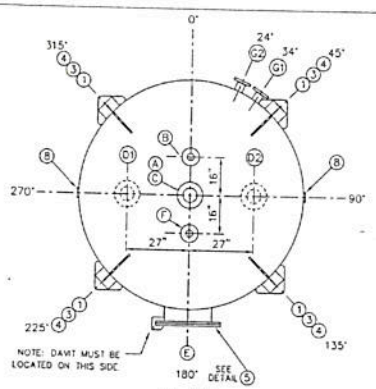

PLAN

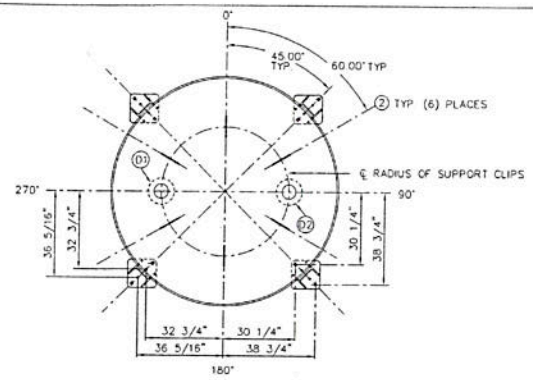

SECTION B–B

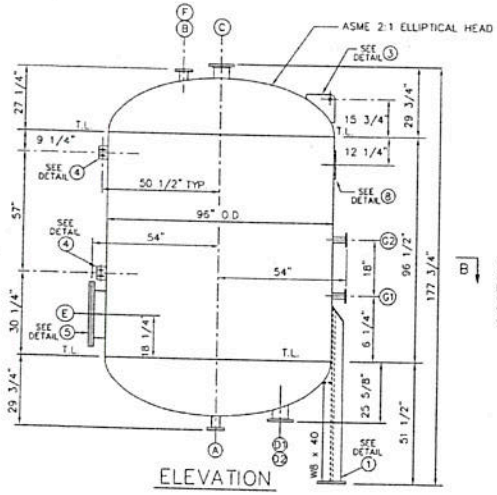

ELEVATION

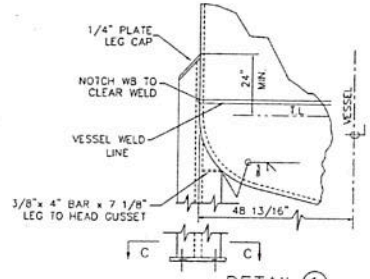

DETAIL 1
VESSEL SUPPORT LEGS
4 REQ'D

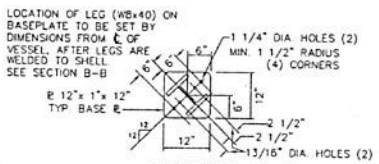

SECTION C–C

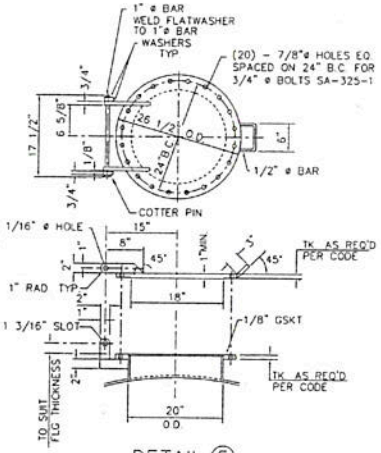

DETAIL 5
20" MANWAY

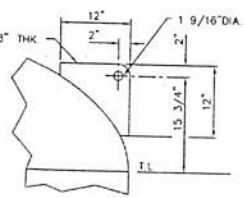

DETAIL 3
LIFTING LUGS
4 REQ'D.

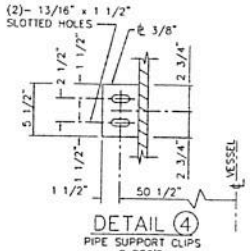

DETAIL 4
PIPE SUPPORT CLIPS
8 REQ'D.

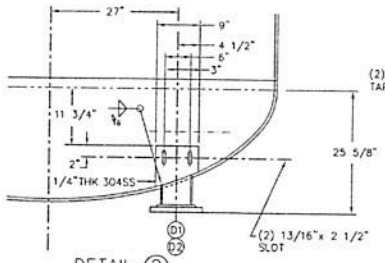

DETAIL 2
UNDERDRAIN SUPPORT (6) REQUIRED
ELEVATION

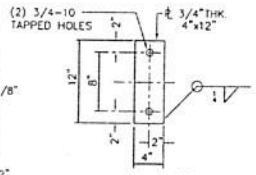

DETAIL 8
PIPE SUPPORT
(2) REQUIRED

SERVICE DESCRIPTION	ADSORBER PV-1 PV-2		
REFERENCES	VESSEL SPECIFICATION 7209A-VS1		
DESIGN CONDITIONS	75 PSIG @ 150° F		
OPERATING CONDITIONS	60 PSIG @ 100° F		
WALL THICKNESS	PER CODE REQUIREMENTS		
MATERIALS OF CONSTRUCTION	SHELL	PER CODE REQUIREMENTS	
	TOP HEAD	PER CODE REQUIREMENTS	
	BOT. HEAD	PER CODE REQUIREMENTS	
	LINING	PLASITE 4110 35-45 MIL. DFT, NOMINAL PIN HOLE FREE FOR IMMERSION SERVICE	
	SUPPORTS	A-36	
	BOLTING	SA-325-1 W/ HVY. HEX NUTS (SEE NOTE 3)	
	GASKETS	1/8" EPR (45-55 DUROMETER)	
TYPE CONSTRUCTION	FUSION WELDED		
CORROS. ALLOW.	NONE		
CODE	ASME SECTION VIII, DIVISION 1		
INSPECTION	BY CALGON & CODE AGENCY		
STAMPING	ASME		
TESTING	HYDROSTATIC PER CODE		
STRESS RELIEF	PER CODE		
RADIOGRAPH	PER CODE & CALGON P.O.		
NAMEPLATE	NONE		
STENCILS	NONE		
SEISMIC LOAD	ZONE 4	WIND LOAD – (12PSF)	
INSULATION	NONE (SEE NOTE 7)		
SURFACE PREP	CLEAN ALL EXPOSED CARBON STEEL SURFACES		
PAINTING	SHERWIN WILLIAMS B-58 SERIES EPOXY MASTIC COLOR (GRAY)		
LOCATION			
CAPACITIES	FULL	3,950 GAL. 528 CU FT	
	OPERATING	3,950 GAL.	AT 100 % FILL
	MEDIA	10,000 LBS	AT % FILL
PRODUCT S. G.	GR. 1.2		
WEIGHTS	EMPTY	7300 LBS.	
	FULL H_2O	40,227 LBS.	
	FULL PRODUCT	17,370 LBS. (DRY CARBON)	
	OPERATING	44,400 LBS.	

NOZZLE SCHEDULE

MARK	REQ'D	SIZE	DRILLING	FACING	DESCRIPTION
G	2	2"	150#	F.F.	SAMPLE POINT – SEE NOTE 8
F	1	3"	150#	LAP JT.	SPRAY WATER
E	1	20"		F.F.	MANWAY (BLIND FLANGE GSKT)
D	2	6"	150#	LAP JT.	EFFLUENT
C	1	6"	150#	LAP JT.	INFLUENT
B	1	3"	150#	LAP JT.	CARBON INLET/VENT
A	1	3"	150#	LAP JT.	CARBON OUTLET

NOTES:

1. ALL INTERIOR WELDS & EDGES TO BE GROUND TO 1/8" MIN
2. ALL NOZZLES MUST BE FLUSH ON INSIDE OF SHELL, U.O.N.
3. ALL NUTS & BOLTS TO BE CADMIUM OR ZINC PLATED
4. 20" MANWAY FLG. TO BE SECURED WITH (2) BOLTS
5. REMOVE ALL WATER & DIRT AFTER HYDRO
6. REMOVE ALL WELD SPATTER
7. CONTACT CCC FOR HEAT TRACE REQUIREMENTS
8. NOZZ. G1, G2, & (1) NOZZ. D TO INCLUDE ASTM A105 150 LB. BLIND FLANGE, BOLTS, NUTS AND BLIND FLANGE GASKET INSTALLED

NO	REVISION	BY	CHK'D	DATE

ENVIRONMENTAL ASSESSMENT & REMEDIATIONS
HAMPTON BAYS PROJECT
NYSDEC SPILL NUMBER 01-25324

PLOTTED 9-8-03

CALGON

CALGON CARBON CORPORATION
P. O. BOX 717 PITTSBURGH PA 15230-0717

THIS DRAWING AND DESIGN IS THE PROPERTY OF CALGON CARBON CORPORATION AND IS NOT TO BE REPRODUCED IN WHOLE OR PART NOR EMPLOYED FOR ANY PURPOSE OTHER THAN SPECIFICALLY PERMITTED IN WRITING BY CALGON CARBON CORPORATION. THIS DRAWING LOANED SUBJECT TO RETURN ON DEMAND.

PLANT

TITLE
MODULAR ADSORBER SYSTEM
8'-0" DIA. ADSORBER
75 PSIG

DRAWN	CHECKED	APPROVED	SCALE
JFS			NTS

PROJECT EM-03062 HBAY
DRAWING NO 91-03-4402
REV. 0

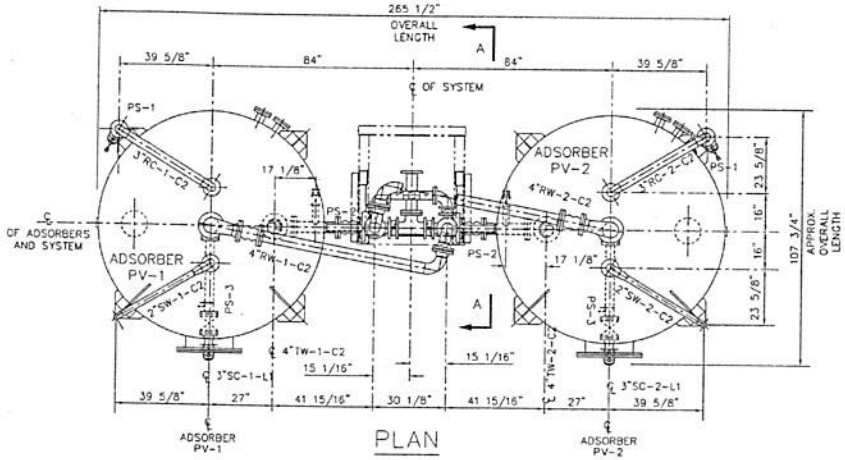

PLAN

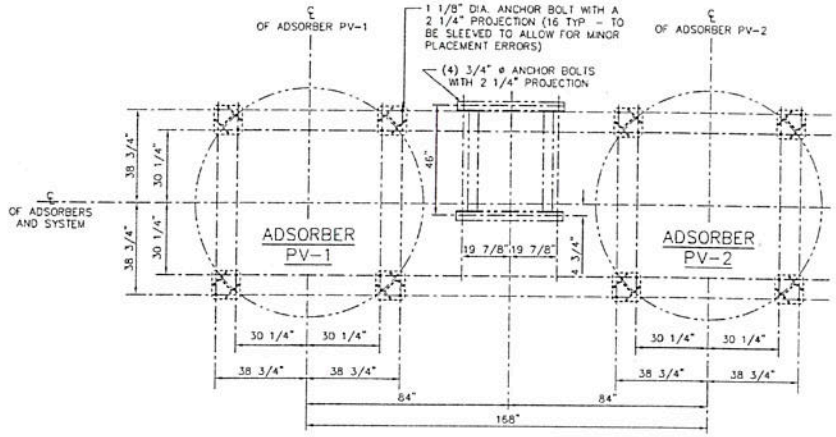

ANCHOR BOLT PLAN

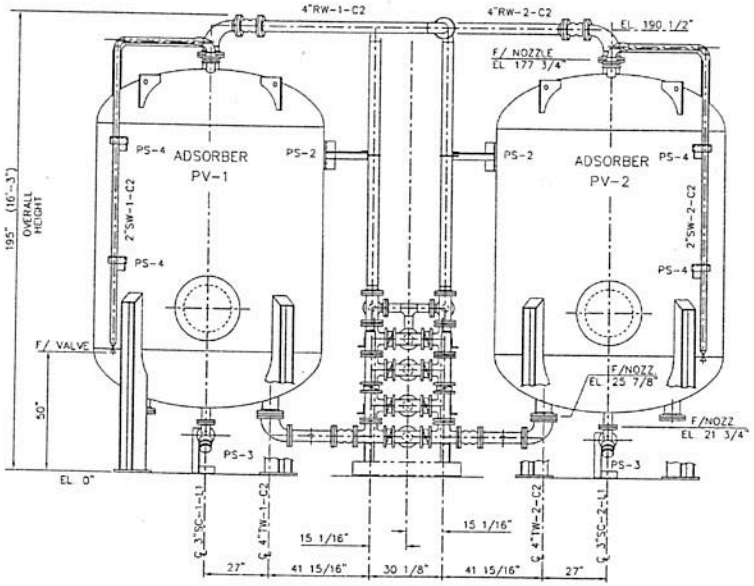

ELEVATION

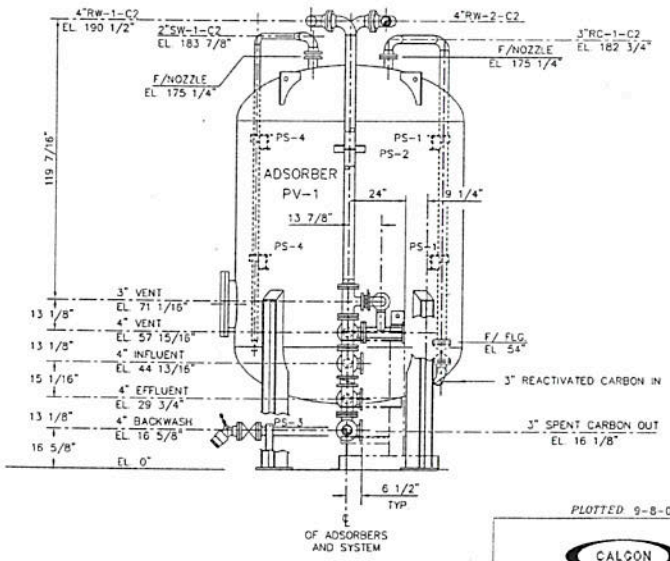

SECTION A–A

NO	REVISION	BY	CHKD	DATE

ENVIRONMENTAL ASSESSMENT & REMEDIATIONS
HAMPTON BAYS PROJECT
NYSDEC SPILL NUMBER 01-25324

PLOTTED 9-8-03

CALGON

CALGON CARBON CORPORATION
P. O. BOX 717 PITTSBURGH PA. 15230-0717

PLANT

TITLE MODULAR ADSORBER SYSTEM
8' DIA. VESSEL
4" BACKWASH
GENERAL ARRANGEMENT

THIS DRAWING AND DESIGN IS THE PROPERTY OF CALGON CARBON CORPORATION AND IS NOT TO BE REPRODUCED IN WHOLE OR PART, NOR EMPLOYED FOR ANY PURPOSE OTHER THAN SPECIFICALLY PERMITTED IN WRITING BY CALGON CARBON CORPORATION. THIS DRAWING LOANED SUBJECT TO RETURN ON DEMAND

DRAWN	CHECKED	APPROVED	SCALE
JFS			3/8"=1'-0"

PROJECT LM-03062.HBAY

DRAWING NO 91-03-4401

REV 0