LARGE CAPACITY TRAY

The large capacity tray can hold approximately 3,500 sheets (21 lbs. (80 g/m²)) of 8-1/2" x 11" (A4) size paper. (For the types of paper that can be loaded in the large capacity tray, see "Large Capacity tray" in the tray specifications (page 2-9).)

Part name

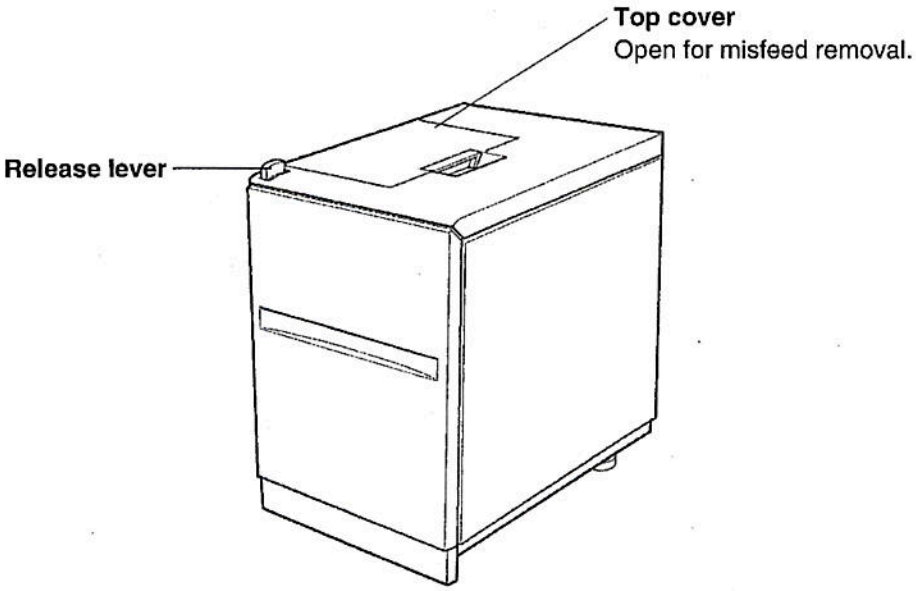

NOTES

- Do not place heavy objects on the large capacity tray or press down hard on the tray.
- To install the large capacity tray, the optional duplex module/2 x 500 sheet paper drawer or the stand/3 x 500 sheet paper drawer must also be installed.

Specifications

Name	LARGE CAPACITY TRAY (AR-LC8)
Paper size	8-1/2" x 11" (A4)
Paper weight	17 to 28 lbs. (64 to 105 g/m²)
Number of trays	1 tray
Paper capacity	3,500 sheets (21 lbs. or 80 g/m²)
Power supply	Supplied from machine
Dimensions	14-13/16" (W) x 21-15/32" (D) x 23-7/16" (H) (376 mm (W) x 545 mm (D) x 595 mm (H))
Weight*	Approximately 66.2 lbs. (30kg) *without mounting kit
Overall dimensions when attached to machine	38-7/16" (W) x 26-5/8" (D) (976 mm (W) x 676 mm (D))

Specifications are subject to change for improvement without notice.

INSTALLATION REQUIREMENTS

Improper installation may damage this product. Please note the following during initial installation and whenever the machine is moved.

1. The machine should be installed near an accessible power outlet for easy connection.

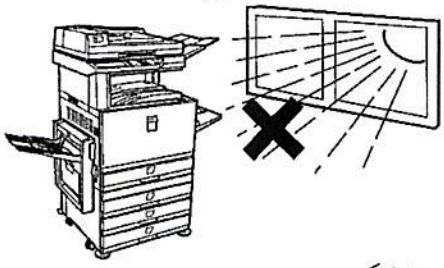

2. Be sure to connect the power cord only to a power outlet that meets the specified voltage and current requirements. Also make certain the outlet is properly grounded.
   - For the power supply requirements, see the name plate on the main unit.

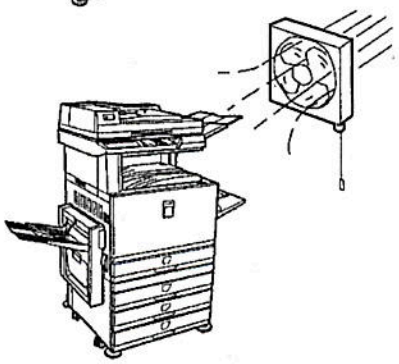

3. Do not install your machine in areas that are:
   - damp, humid, or very dusty
   - exposed to direct sunlight
   - poorly ventilated
   - subject to extreme temperature or humidity changes, e.g., near an air conditioner or heater.

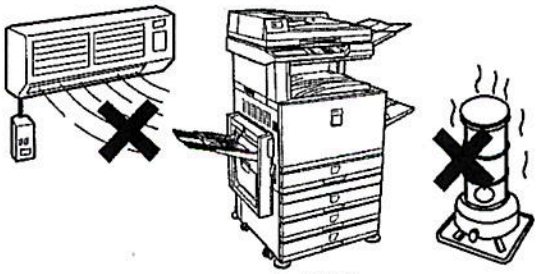

4. Be sure to allow the required space around the machine for servicing and proper ventilation.

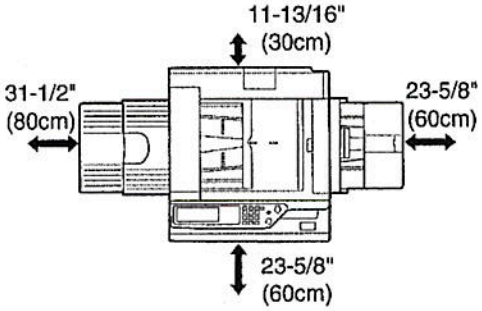

A small amount of ozone is produced within the copier during operation. The emission level is insufficient to cause any health hazard.

NOTE:

The present recommended long term exposure limit for ozone is 0.1 ppm (0.2 mg/m^3) calculated as an 8 hr. time-weighted average concentration.

However, since the small amount that is emitted may have an objectionable odor, it is advisable to place the copier in a ventilated area.

Moving this machine

Pull out the four handles as shown below, grasp them firmly, and keep the machine horizontal while moving it.

Left side

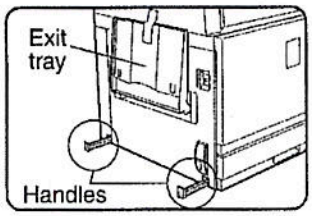

Before lifting the machine, fold up the exit tray and tape it securely to the machine.

Right side

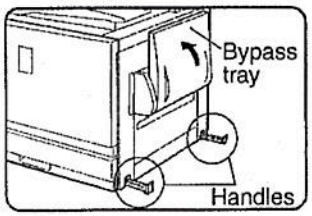

Before lifting the machine, fold up the bypass tray and tape it securely to the machine.

Caution

Two people are required to lift and carry this machine.

If the machine has been placed on a stand/paper drawer:

The stand/paper drawer is on casters for moving. Unlock the casters and the adjusters of the stand/paper drawer and gently move the machine taking care to steady it to prevent it from toppling.
For locking and unlocking the casters and the adjusters, see page 0-4.

If the machine is to be left unused for a long time

If the machine is to be left unused for a month or longer, follow the procedure on pages 2-6 and 2-7 to release the pressure on the fusing roller.