NEW YORK STATE OF OPPORTUNITY. | Office of General Services | Procurement Services

Corning Tower, Empire State Plaza, Albany, NY 12242 | www.nyspro.ogs.ny.gov | customer.services@ogs.ny.gov | 518-474-6717

Contract Award Notification

Title	:	**Group 40903 – VARIOUS SNOWPLOW STEEL CUTTING EDGES AND SHOES (NYS DOT and Authorized Users)** **Classification Code(s): 25**
Award Number	:	**22911**
Contract Period	:	**April 1, 2015 – March 31, 2018**
Bid Opening Date	:	**February 3, 2015**
Date of Issue	:	**March 31, 2015 (Revised July 26, 2016)**
Specification Reference	:	**As Incorporated Herein**
Contractor Information	:	**Appears on Page 2 of this Award**

Address Inquiries To:

State Agencies & Vendors	Political Subdivisions & Others
Name : Colleen Glynn-Piscitella Title : Contract Management Specialist Phone : 518-486-3626 Fax : E-mail : colleen.glynn@ogs.ny.gov	Procurement Services Customer Services Phone : 518-474-6717 Fax : 518-474-2437 E-mail : customer.services@ogs.ny.gov

Procurement Services values your input.
Complete and return "Contract Performance Report" at end of document.

Description

The purpose of this Award is to provide NYS Department of Transportation and Authorized Users with a means of acquiring Various Snowplow Steel Cutting Edges and Shoes per the detailed specifications and drawings listed herein.

PR # 22911

(Continued)

NOTE: See individual contract items to determine actual awardees.

CONTRACT #	CONTRACTOR & ADDRESS	TELEPHONE #	FED.IDENT.# / NYS VENDOR#
PC66760	CHEMUNG SUPPLY CORP.	800-733-5506	16-0380890/ 1000007427
PC66761	VALK MANUFACTURING COMPANY	717-766-0711	23-1399803/ 1000008888

FOR COMPLETE CONTRACTOR CONTACT INFORMATION, PLEASE REFER TO CONTRACTORS' INFORMATION DOCUMENT.

NOTE TO AUTHORIZE USERS:

When placing purchase orders under the contract(s), the authorized user should be familiar with and follow the terms and conditions governing its use which usually appears at the end of this document. The authorized user is accountable and responsible for compliance with the requirements of public procurement processes. The authorized user must periodically sample the results of its procurements to determine its compliance. In sampling its procurements, an authorized user should test for reasonableness of results to ensure that such results can withstand public scrutiny.

The authorized user, when purchasing from OGS contracts, should hold the contractor accountable for contract compliance and meeting the contract terms, conditions, specifications, and other requirements. Also, in recognition of market fluctuations over time, authorized users are encouraged to seek improved pricing whenever possible.

REQUEST FOR CHANGE:

Any request by the agency or contractor regarding changes in any part of the contract must be made in writing to the Office of General Services, Procurement Services Group prior to effectuation.

NOTE TO CONTRACTOR:

This Contract Award Notification is not an order. Do not take any action under this contract except on the basis of purchase order(s) from the agency or agencies

OVERVIEW:

This Award is issued by the New York State Office of General Services Procurement Services. The commodities contract awarded is a centralized contract for use by New York State Agencies and Authorized Non-State Agencies Participation in Centralized Contracts. Accordingly, references to the State and its Agencies as Authorized Users under this solicitation and the ensuing contract encompasses and includes all such entities within the definition of "Authorized User" set forth in Appendix B.

OVERLAPPING CONTRACT PRODUCTS

Products available in the contract may also be available from other New York State contracts. Contract users will be advised to select the most cost effective procurement alternative that meets their program requirements and to maintain a procurement record documenting the basis for this selection

PROCUREMENT INSTRUCTIONS:

The Authorized User should be familiar with and follow the terms and conditions governing its use which appear in the contract document. Listed below are separate guidance for "Executive Agencies" and "Non-Executive Agencies". All Authorized Users shall issue purchase order(s) directly to the Contractor by mail or fax, listed in Contractors' Information document.

Upon Authorized User acceptance of products itemized on the purchase order, Contractor(s) will invoice Authorized User for any portion of products accepted, and accordingly, Authorized User will arrange for payment. Contractor shall provide itemized invoicing for all products in accordance with the contractual requirements.

(Continued)

FOR EXECUTIVE AGENCIES:
An Executive Agency Authorized User shall first purchase all contract items from the appropriate Preferred Sources as required by State Finance Law §162. If the Preferred Sources do not provide a product that meets the form, function and utility of the Executive Agency Authorized User, it may then purchase products from the Contractor(s).

FOR NON-EXECUTIVE AGENCIES:
A Non-Executive Agency Authorized User that is subject to the requirements of State Finance Law §162 (4) shall first purchase all contract items from the appropriate Preferred Sources as required by State Finance Law §162. If Preferred Source products do not meet the entity's form, function and utility (as required by State Finance Law §162) then it may purchase products from the Contractor(s).

A Non-Executive Agency Authorized User that is not subject to the requirements of State Finance Law §162 (4) may purchase products directly from the Contractor(s)

PRICE:

General -- Price is net, F.O.B. destination any point in New York State as designated by the ordering agency on orders over $250.00 and shall include:

- Tailgate delivery
- All customs, duties and charges
- Expansion of delivery locations upon mutual agreement per the "Extension of Use" clause.
- Where items are specifically requested by NYS Department of Transportation to be delivered "next day", terms will be "f.o.b. destination – freight prepaid and added to invoice". Invoices bearing freight added must be supported by an actual copy of the carrier's freight bill. Orders that are delivered via the Contractor's vehicle are never eligible for payment of delivery costs.

Firm Pricing – Prices are firm for the entire contract period and the extension periods, if any, except for the price changes as allowed in clause - PPI PRICE ADJUSTMENT.

Lower Pricing – The State reserves the right to negotiate lower pricing, or to advertise for bids, whichever is in the State's best interest as determined by the commissioner, in the event of a significant decrease in market price of any product listed. Additionally, price decreases as indicated by an annual review of the applicable PPI index will be reflected in contract pricing upon written notice by the Office of General Services to the contractor(s).

Unworkable Price Structure - Should the price structure utilized by the parties become unworkable, detrimental or injurious to the State, or result in prices which are not truly reflective of current market conditions, or result in prices deemed unreasonable or excessive by the Commissioner, and no adjustment in price is mutually agreeable, the Commissioner reserves the sole right upon 10 days written notice mailed to the contractor to terminate any contract resulting from this bid opening. If the contractor is unable or unwilling to meet contractual requirements in whole or in part based on an unworkable price structure, it shall immediately notify the State of that fact in order that the State may take appropriate action. Such notification shall be in writing and shall be directed to the Office of General Services, Procurement Services. Such notification shall not relieve the contractor of its responsibilities under the contract.

Limitation - Price adjustments are limited to changes as allowed for in this PRICE clause. Increases in contract costs or prices to compensate for other increases in the cost of doing business, regardless of the cause or nature of such costs to the contractor, may not be allowed during the contract period.

Other Price Adjustments - No additional, separate adjustment in price for fuel, labor, etc., shall be permitted other than the "PPI Price Adjustment" as described below.

PPI Price Adjustment - Pricing will be firm for the first year of each approved Contract. Every subsequent year thereafter, a price adjustment will be allowed based on the Producer Price Index Commodity Data (PPI) for Not Seasonally Adjusted (Series ID: WPU101702 as published by the US Department of Labor, Bureau of Labor Statistics, Washington D. C. 20212, with such adjustment applying to orders based on the date of issuance of purchase order, NOT on the date of delivery. If, at any time, the series ID is discontinued or not available, the State

(Continued)

reserves the right to implement another applicable index.

Price adjustments using the PPI involve changing the Price per "Unit" for each item awarded by the change in the level of the PPI between the January 2015 ("base"/"reference" month) and a subsequent, same month in the future year(s). Every subsequent price adjustment shall be based on utilizing the PPI January 2015 final Index figure as the base/reference and comparing it to the subsequent same month in the future year(s) being used. Each price adjustment shall be effective on the start date of the award.

Detail follows on the PPI, formula, etc.:

PPI
Series ID: WPU101702
Not Seasonally Adjusted
Group: Metals and metal products
Item: Semifinished steel mill products
Website: http://www.bls.gov/ppi/data.htm

VOLUME DISCOUNTS:
All contract users are encouraged to negotiate lower pricing with Contractor(s) whenever large volume purchases to a single delivery location are being made.

DETAIL SPECIFICATIONS:
STEEL CUTTING EDGES FOR SNOWPLOWS, SNOWPLOW WINGS & TRACTOR SHOVELS

GENERAL DESCRIPTION:
These specifications and the applicable drawings as herein, describes the type, size, design and quality of cutting edges to be furnished. All parts shall be stenciled with the DOT Item Number (shown on drawings herein).

DRAWINGS:
LOT A - Drawings labeled DOT Item Nos. 44 and 48; and LOT B, drawings labeled DOT Item no, 28 and 29 are incorporated as part of this contract.

STEEL:
Cutting edges shall be fabricated from hot rolled, open hearth, merchant quality carbon steel.

LOT A
SNOW PLOW, GRADER CUTTING EDGES: (SAE 1080 Steel) (DOT Items #44 and #48)

- Bolt holes shall be countersunk on 82° angle.
- All grader cutting edges shall have ends cut cleanly at right angles and square so that blades can be used in pairs.
- Cutting edge lengths shall not exceed the specified dimension and shall not be more than 1/16" shorter than specified.
- Hole position must not be offset more than 1/16" from specified positions.
- Flat, square-edge snow plow blades shall include the universal mill edge or the slightly rounded band edge.

LOT B
SNOW PLOW CUTTING EDGES WITH TUNGSTEN CARBIDE INSERTS: (SAE 1020 Steel) (DOT Items #28 and #29)

- The blade shall be hot rolled finish A.I.S.I. 1020 steel finished to dimension shown on drawings. All bolts holes shall be located as shown on the drawings. The tungsten-carbide inserts shall be securely brazed on all sides into the groove over the entire length of cutting edge consistent with sound brazing or equal practice. The inserts shall be positioned as closely together as possible over the entire length of the blade.
- The inset shall be cemented tungsten-carbide of the design shown on drawings. They shall be 1" wide x .360" thick x .630 long with ground finish, located in the blade as shown on the drawings.

(Continued)

The tungsten-carbide shall have a nominal hardness of 88.0 HRA (Rockwell A Scale), a nominal TRS of 350,000 PSI and shall be Firth Sterling grade MPD-11 or approved equal.

- The braze shall be consistent with sound brazing techniques with the insert placed in the groove so that the braze thickness is the same on both sides of the inserts. The braze material shall be a high strength alloy, minimum 30,000 PSI shear strength, and the braze joint shall have sufficient strength to withstand the shock loads that are applied. The braze sections shall be free of war-page and longitudinal deviation not to exceed 1/8" on a four-foot section. The carbide inserts shall be flush on both ends of each blade section. With each section there shall be furnished a complete set of heat treated Grade 8 steel plow bolts with hexagon locknuts.

CERTIFICATION:

Prior to shipment, the Contractor may be required to furnish the NYS Office of General Services, Procurement Services, with a manufacturer's certified steel analysis.

SNOWPLOW SHOES:

GENERAL DESCRIPTION:

These specifications, including drawings (herein), describe the type and size of the various wear shoes and attachments to be furnished for snow plows. A shoe(s) which requires modification of itself or existing plow equipment in order to be installed, will not be considered. Bolt hole location shall not vary more than + 1/32" from the positions specified.

DRAWINGS:

LOT C (CAST), drawing labeled DOT Item #21; and LOT D (FABRICATED) drawings labeled DOT Item #15 and 19A are incorporated as part of this contract.

LOT C

SNOWPLOW SHOES (CAST) (DOT Item #21)

PHYSICAL ANALYSIS:

- These shoes shall be castings of heat treated ferrous alloy conforming to the following minimum requirements:

Wear Surface	- Brinnell Hardness 500HB
Core	- Brinnell Hardness 450HB
Impact Test	- Izod, 19 ft. lbs.
Tensile Strength	- 42,000 PSI

- Expected life of these shoes shall be four (4) times that of cast-chilled malleable-iron type shoes. Contractor shall replace these plow shoes, on a no-charge basis, if breakage or excessive wear occurs.

MARKING:

The DOT Item Number shall be stenciled on the non-wear surface of each shoe.

LOT D

SNOWPLOW SHOES (FABRICATED) (DOT Items #15 and #19A):

GENERAL DESCRIPTION:

Lot D requirements for "MARKING" shall be the same as Lot C requirements. Lot D shall be fabricated type shoes in lieu of cast type shoe.

Additionally, the following requirements apply to Lot D:

PHYSICAL ANALYSIS:

- Brinnell Hardness of the steel shall be three hundred sixty (360 $\pm$ 20) plus or minus twenty.
- Wear-plate (contact surface component) steel shall be Jalloy® -AR-360 type, having an atmospheric corrosion resistance two to four times longer than regular carbon steel. The State will consider alternative brands of steel which meet, or exceed, the stated parameters.

(Continued)

- The two gussets shall be continuously welded to the adjoining mounting plate (bar) and the shoe plate. The weld shall be on one side of the gussets (minimum). The mounting plate shall be continuously welded on both the front and rear faces to the shoe plate.

DEFINITIONS:

The terms used in this Contract are defined in accordance with Appendix B (General, §2 Definitions). In addition, the following definitions shall apply.

"Authorized User(s)" as defined in Appendix B.

"Commissioner" shall mean the Commissioner of the Office of General Services or duly authorized representative.

"**Contract"** as defined in Appendix B.

"Contractor" shall refer to a responsive and responsible Bidder who has offered the lowest price for the IFB and is working under an executed contract with New York State. Contractor is a general term.

"Department of Transportation (DOT)" shall refer to the NYS Agency that the drawings are specified.
.

"Issuing Office" shall refer to the Office of General Services

"May" denotes the permissive in a contract clause or specification. Also see "Shall" and "Must".

"Must" denotes the imperative in a contract clause or specification. Also see "Shall" and "May".

"M/WBE" shall refer to a business certified with NYS Empire State Development (ESD) as a Minority and/or Women-owned Business Enterprise.

"NYS Holidays" refers to the legal holidays for State Employees in the Classified Service of the Executive Branch, as more particularly specified on the website of the NYS Department of Civil Service. This includes the following: New Year's Day; Martin Luther King Day; Washington's Birthday (observed); Memorial Day; Independence Day; Labor Day; Columbus Day; Veteran's Day; Thanksgiving Day; and Christmas Day.
http://www.cs.ny.gov/attendance_leave/TM_40.cfm

"Preferred Source Offering" shall refer to those commodities or services that have been approved in accordance with State Finance Law §162.

"Preferred Source Program" shall refer to the special social and economic goals set by New York State in State Finance Law §162 that require a governmental entity purchase select commodities and services from designated organizations when the commodities or services meet the "form, function and utility" requirements of the governmental entity. Under State Finance Law §163, purchases of commodities and services from preferred sources are given the highest priority and are exempt from the competitive bidding requirements. The New York State preferred sources include: Corcraft; National Industries for the Blind; New York State Industries for the Disabled; and the Office of Mental Health. These requirements apply to a state agency, political subdivision and public benefit corporation (including most public authorities).

"Procurement Services" shall mean a division of the New York State Office of General Services which is authorized by law to issue centralized, statewide contracts for use by New York agencies, political subdivisions, schools, libraries and others authorized by law to participate in such contracts.

"Producer Price Index Commodity Data (PPI)" shall mean a family of indexes that measures the average change in selling prices received by domestic producers of goods and services over time. PPIs measure price change from the perspective of the seller.

"Shall" denotes the imperative in a contract clause or specification. Also see "Must" and "May".

(Continued)

"The State" shall mean The People of the State of New York, which shall also mean the New York State Office of General Services.

"0 (Zero)" is both a number and the numerical digit used to represent that number in numerals. It is the integer immediately preceding 1 (one).

NON-STATE AGENCIES PARTICIPATION IN CENTRALIZED CONTRACTS:

New York State political subdivisions and others authorized by New York State law may participate in contracts. These include, but are not limited to local governments, public authorities, public school and fire districts, public and nonprofit libraries, and certain other nonpublic/nonprofit organizations. See "Participation in Centralized Contracts" in Appendix B, OGS General Specifications. For purchase orders issued by the Port Authority of New York and New Jersey (or any other authorized entity that may have delivery locations adjacent to New York State), the terms of the "Price" clause shall be modified to include delivery to locations adjacent to New York State.

Upon request, all eligible non-State agencies must furnish the Contractor with the proper tax exemption certificates and documentation certifying eligibility to use State contracts. A list of categories of eligible entities is available on the OGS web site (http://ogs.ny.gov/purchase/snt/othersuse.asp). Questions regarding an organization's eligibility to purchase from New York State Contracts may also be directed to Procurement Services' Customer Services at 518-474-6717.

OGS OR LESS" GUIDELINES APPLY TO THIS CONTRACT:

Purchases of the products included in the Contract are subject to the "OGS or Less" provisions of State Finance Law §163(3)(a)v). This means that State agencies can purchase products from sources other than the Contractor provided that such products are substantially similar in form, function or utility to the products herein and are:

1. lower in price
   -and/or-
2. available under terms which are more economically efficient to the State agency (e.g. delivery terms, warranty terms, etc.).

Agencies are reminded that they must provide the State contractor an opportunity to match the non-contract savings at least two business days prior to purchase. In addition, purchases made under "OGS or Less" flexibility must meet all requirements of law including, but not limited to, advertising in the New York State Contract Reporter, prior approval of the Comptroller's Office and competitive bidding of requirements exceeding the discretionary bid limit. State agencies should refer to Procurement Council Guidelines for additional information.

PREFERRED SOURCE PRODUCTS:

Section 162 of the State Finance Law requires that agencies, including Executive Agencies, afford first priority to the products/services of preferred source suppliers such as Corcraft (the marketplace name for the NYS Department of Corrections and Community Supervision, Division of Industries), National Industries for the Blind, and NYS Industries for the Disabled, and others determined by law, when such products/services meet the form, function and utility of the agency. Some products/services in the resultant contract(s) may be available from one or more preferred sources.

DISPUTE RESOLUTION POLICY:

It is the policy of the OGS Procurement Services to provide vendors with an opportunity to administratively resolve disputes, complaints or inquiries related to Procurement Services bid solicitations or contract awards. Procurement Services encourages vendors to seek resolution of disputes through consultation with Procurement Services staff. All such matters will be accorded impartial and timely consideration. Interested parties may also file formal written disputes. A copy of Procurement Services Dispute Resolution Procedures for Vendors may be obtained by contacting the person shown on the front of this Contract Award Notice or through the OGS website (www.ogs.ny.gov).

DEBRIEFING:

Contractors and Bidder are accorded fair and equal treatment with respect to its opportunity for debriefing. OGS shall, upon request, provide a debriefing to any Bidder or awarded Contractor that responded to the solicitation, regarding the reason that the proposal or bid submitted by the unsuccessful bidder was not selected for a Contract

(Continued)

award. Requests for debriefings by unsuccessful Bidders must be addressed to OGS in writing. The post-award debriefing should be requested in writing within 30 days of posting of the Contract award on the OGS website.

CONFLICT OF TERMS:

The following are incorporated into the Contract. Conflicts among the documents shall be resolved in the following order of precedence:

1. Appendix A, Standard Clauses for New York State Contracts;
2. Contract Award Notice;
3. Appendix B, General Specifications; and
4. Specification Clarification
5. Insurance Clarification
6. Contractor's Bid
7. Price Pages
8. Other Attachments

RESERVATION OF RIGHT:

The State reserves the right to negotiate lower pricing, or to advertise for bids, any unanticipated excessive purchase. An "unanticipated excessive purchase" is defined as an unexpected order for a contract product(s) totaling more than $30,000.

NEW YORK STATE VENDOR RESPONSIBILITY QUESTIONNAIRE FOR-PROFIT BUSINESS ENTITY:

Contractor is encouraged to maintain up-to-date Questionnaire during the life of the contract and is also required to ensure this Questionnaire reflects any substantive issues that may have occurred from the time the Contract was initially awarded.

The Contractor shall at all times during the Contract term remain responsible. The Contractor agrees, if requested by the Commissioner of OGS or her designee, to present evidence of its continuing legal authority to do business in New York State, integrity, experience, ability, prior performance, and organizational and financial capacity.

The Commissioner of OGS or her designee, at her sole discretion, reserves the right to suspend any or all activities under this Contract, at any time, when she discovers information that calls into question the responsibility of the Contractor. In the event of such suspension, the Contractor will be given written notice outlining the particulars of such suspension. Upon issuance of such notice, the Contractor must comply with the terms of the suspension order. Contract activity may resume at such time as the Commissioner of OGS or her designee issues a written notice authorizing a resumption of performance under the Contract.

Upon written notice to the Contractor, and a reasonable opportunity to be heard with appropriate OGS officials or staff, the Contract may be terminated by the Commissioner of OGS or her designee at the Contractor's expense where the Contractor is determined by the Commissioner of OGS or her designee to be non-responsible. In such event, the Commissioner of OGS or her designee may complete the contractual requirements in any manner he or she may deem advisable and pursue available legal or equitable remedies for breach.

In no case shall such termination of the Contract by the State be deemed a breach thereof, nor shall the State be liable for any damages for lost profits or otherwise, which may be sustained by the Contractor as a result of such termination

INSURANCE:

Contractor must maintain the required insurances as set forth in awarded Insurance Requirements, during the Contract Period and any renewals thereof.

CONTRACTOR REQUIREMENTS AND PROCEDURES FOR EQUAL EMPLOYMENT AND BUSINESS PARTICIPATION OPPORTUNITIES FOR MINORITY GROUP MEMBERS AND NEW YORK STATE CERTIFIED MINORITY-AND WOMEN-OWNED BUSINESS ENTERPRISES

I. General Provisions

A. OGS is required to implement the provisions of New York State Executive Law Article 15-A and 5 NYCRR Parts 142-144 ("MWBE Regulations") for all State contracts as defined therein, with a value (1) in excess of

(Continued)

$25,000 for labor, services, equipment, materials, or any combination of the foregoing or (2) in excess of $100,000 for real property renovations and construction.

B. The Contractor agrees, in addition to any other nondiscrimination provision of the Contract and at no additional cost to OGS, to fully comply and cooperate with OGS in the implementation of New York State Executive Law Article 15-A. These requirements include equal employment opportunities for minority group members and women ("EEO") and contracting opportunities for New York State certified minority- and women-owned business enterprises ("MWBEs"). Contractor's demonstration of "good faith efforts" pursuant to 5 NYCRR §142.8 shall be a part of these requirements. These provisions shall be deemed supplementary to, and not in lieu of, the nondiscrimination provisions required by New York State Executive Law Article 15 (the "Human Rights Law") or other applicable federal, State or local laws.

C. The Contractor further agrees to be bound by the provisions of Article 15-A and the MWBE Regulations. If any of these terms or provisions conflict with applicable law or regulations, such laws and regulations shall supersede these requirements.

D. Failure to comply with all of the requirements herein may result in a finding of non-responsiveness, non-responsibility and/or a breach of contract, leading to the withholding of funds, suspension or termination of the Contract or such other actions or enforcement proceedings as allowed by the Contract.

II. Contract Goals

A. For purposes of this procurement, OGS conducted a comprehensive search and determined that this contract does not offer sufficient opportunities to set goals for participation by MWBEs as subcontractors, service providers and suppliers to Contractor. Contractor is however encouraged to make every good faith effort to promote and assist the participation of MWBEs who perform commercially useful functions on this Contract for the provision of services and materials. To locate MWBEs, the Directory of Certified Businesses can be viewed at:
https://ny.newnycontracts.com/FrontEnd/VendorSearchPublic.asp?TN=ny&XID=2528
Additionally, Contractor is encouraged to contact the Division of Minority and Women's Business Development ((518) 292-5250; (212) 803-2414; or (716) 846-8200) to discuss additional methods of maximizing participation by MWBEs on the Contract.

B. **Commercially Useful Function**
Pursuant to 5 NYCRR § 140.1(f), a MWBE performs a commercially useful function when it is responsible for execution of the work of the contract and is carrying out its responsibilities by actually performing, managing, and supervising the work involved. To perform a commercially useful function, a MWBE must, where applicable and in accordance with any State Agency specifications, also be responsible, with respect to materials and supplies used on the contract, for ordering and negotiating price, determining quality and quantity and installing. A MWBE does not perform a commercially useful function if its role adds no substantive value and is limited to that of an extra participant in a transaction, contract, or project through which funds are passed in order to obtain the appearance of participation. OGS will assess whether a MWBE is performing a commercially useful function by considering the following:

(1) the amount of work subcontracted;
(2) industry practices;
(3) whether the amount the MWBE is to be paid under the contract is commensurate with the work it is to perform;
(4) the credit claimed towards MWBE utilization goals for the performance of the work by the MWBE; and
(5) any other relevant factors.

C. Good Faith Efforts

Pursuant to 5 NYCRR § 142.8, evidence of good faith efforts shall include the following:

(1) A list of the general circulation, trade and MWBE-oriented publications and dates of publications soliciting for certified MWBE participation as a subcontractor/supplier and copies of such solicitation.

(2) A list of the certified MWBEs appearing in the Empire State Development MWBE directory that were solicited for this Contract. Provide proof of dates or copies of the solicitations and copies of the responses made by the certified MWBEs. Describe specific reasons that responding certified MWBEs were not selected.

(Continued)

(3) Descriptions of the Contract documents/plans/specifications made available to certified MWBEs by the Contractor when soliciting their participation and steps taken to structure the scope of work for the purpose of subcontracting with or obtaining supplies from certified MWBEs.

(4) A description of the negotiations between the Contractor and certified MWBEs for the purposes of complying with the MWBE goals of this Contract.

(5) Dates of any pre-bid, pre-award or other meetings attended by Contractor, if any, scheduled by OGS with certified MWBEs whom OGS determined were capable of fulfilling the MWBE goals set in the Contract.

(6) Other information deemed relevant to the request.

III. Equal Employment Opportunity (EEO)

A. Contractor shall comply with the following provisions of Article 15-A:
   1. Contractor and Subcontractors shall undertake or continue existing EEO programs to ensure that minority group members and women are afforded equal employment opportunities without discrimination because of race, creed, color, national origin, sex, age, disability or marital status. For these purposes, EEO shall apply in the areas of recruitment, employment, job assignment, promotion, upgrading, demotion, transfer, layoff, or termination and rates of pay or other forms of compensation.
   2. By entering into this Contract, Contractor certifies that the text set forth in clause 12 of Appendix A, attached hereto and made a part hereof, is Contractor's equal employment opportunity policy.

B. Form EEO 100 – Staffing Plan
   To ensure compliance with this section, the Contractor shall submit Form EEO 100- Staffing Plan to document the composition of the proposed workforce to be utilized in the performance of the Contract by the specified categories listed, including ethnic background, gender, and federal occupational categories. Contractor shall complete the Staffing plan form and submit it as part of their contract.

C. Form EEO 101 - Workforce Employment Utilization Report ("Workforce Report")
   Contractor and OGS agree that Contractor is unable to separate out the workforce utilized in the performance of the Contract from Contractor's and/or subcontractor's total workforce and that the information provided on the previously submitted Staffing Plan is Contractor's total workforce during the subject time frame, not limited to work specifically under the contract.

D. Contractor shall comply with the provisions of the Human Rights Law, all other State and federal statutory and constitutional non-discrimination provisions. Contractor and subcontractors shall not discriminate against any employee or applicant for employment because of race, creed (religion), color, sex, national origin, sexual orientation, military status, age, disability, predisposing genetic characteristic, marital status or domestic violence victim status, and shall also follow the requirements of the Human Rights Law with regard to non-discrimination on the basis of prior criminal and conviction and prior arrest.

ALL FORMS ARE AVAILABLE AT: http://www.ogs.ny.gov/MWBE/Forms.asp

DELIVERY:

Delivery is expressed within Contractors' Information document the number of calendar days required to make delivery after receipt of a purchase order to any location in NYS.

Delivery shall be made in accordance with instructions on Purchase Order from each agency. If there is a discrepancy between the purchase order and what is listed on the contract, it is the contractor's obligation to seek clarification from the ordering agency and, if applicable, from the Office of General Services, Procurement Services.

MINIMUM ORDER:

The minimum order quantity Contractor will be required to deliver FOB destination under the resulting contract(s) is $250.00. However, Contractor may elect to honor orders for less than the minimum order.

PACKAGING:

(Continued)

All parts furnished must be in the Manufacturer's individual, original standard package, package shall be clearly marked with the part number and contents.

METHOD OF PAYMENT:
Invoicing and payment shall be made in accordance with the terms set forth in Appendix B §49. Contract Invoicing.

DISCREPANCIES:
The Contractor(s) shall resolve all order and invoice discrepancies (e.g., shortages, incorrect item received, etc.) within five (5) business days from notification.

SETTLEMENTS:
OGS has the right to determine the disposition of any rebate, settlement, restitution, liquidated damage, etc. which arise from the administration of this Contract.

PRODUCT RETURNS BECAUSE OF QUALITY PROBLEMS:
Upon written notification by the Authorized User to the Contractor, products determined to have quality problems, being outdated or damaged, etc., shall be picked up by the Contractor within ten business days after notification with no restocking fee. The Authorized User shall elect whether to receive a replacement product or a credit/refund for the full purchase price. The Authorized User must conduct its inspection, and notify the Contractor within 30 calendar days of delivery. If a defect is not identified within 30 calendar days after delivery, the Authorized User may be required to contact the manufacturer directly. Contractor shall provide an Authorized User with the manufacturer's contact number.

PRODUCT RETURNS BECAUSE OF AUTHORIZED USER ERROR:
Standard stock products ordered in error by Authorized User must be returned for credit within 30 days of receipt. Product must be in resalable condition (original container, unused). Restocking fee may be charged if returned product is not resalable. Restocking fee listed on Contractors' Information document.

INSTRUCTION MANUALS:
Simultaneous with delivery, the contractor(s) shall furnish to the authorized user a complete instruction manual for the product and for each component supplied. The manual shall include complete instructions for unpacking, inspecting, installing, adjusting, aligning, and operating the product, , manufacturer's catalog numbers, and ordering information, if applicable.

ADDITION OF PRODUCTS:
Upgrades to awarded products will be considered for inclusion by awarded Contractors during the contract term provided they are pertinent to the award descriptive and offered to the state at the same terms and conditions as in the original bid and at pricing at the same discount structure of the awarded product.

ADMINISTRATIVE AND REPORTING REQUIREMENTS:
The Contractor shall provide the following reports to OGS Procurement Services, at the e-mail address listed on the Notice of Contract Award, on or before the tenth of the month following the end of each six-month period. Failure to submit reports on a timely basis may result in contract cancellation and designation of Contractor as non-responsible.

REPORT OF CONTRACT PURCHASES:
The Contractor shall submit electronically, each six-months, comprehensive reports as outlined in Report of Contract Usage. Contractor agrees that additional related information may be required and shall be supplied upon request of OGS.

AUTHORIZED USER SALES REPORTS:
Upon written request by an Authorized User, the Contractor shall furnish to such Authorized User, on each six-month basis, a report listing the following: name of Products purchased, quantity purchased, unit price and total dollar volume of purchases.

APPENDICES AND ATTACHMENTS:
The Contractor's attention is directed to the appendices and attachments attached hereto and hereby incorporated by reference and made part hereto as fully as if it were set forth at length herein. The Contractor is responsible for adhering to all requirements of the appendices.

(Continued)

Appendix A, Standard Clauses For New York State Contracts, dated January 2014, attached hereto, is hereby expressly made a part of this contract as fully as if set forth at length herein.

Appendix B, Office of General Services General Specifications, dated June 2014, attached hereto, is hereby expressly made a part of this contract as fully as if set forth at length herein and shall govern any situations not covered by this contract or Appendix A.

CONTRACT PERIOD AND RENEWALS:

It is the intention of the State to enter into a contract for the term as stated herein. If mutually agreed between OGS Procurement Services and the Contractor(s), the contract may be renewed under the same terms and conditions for additional time period(s) not to exceed a total contract term of five (5) years.

SHORT TERM EXTENSION:

In the event the replacement contract has not been issued, any contract let and awarded hereunder by the State, may be extended unilaterally by the State for an additional period of up to three months upon notice to the Contractor with the same terms and conditions as the original contract including, but not limited to, quantities (prorated for such one month extension), prices and delivery requirements. With the concurrence of the Contractor, the extension may be for a period of up to three months in lieu of one month. However, this extension terminates should the replacement contract be issued in the interim.

EXTENSION OF USE:

This contract may be extended to additional States or governmental jurisdictions upon mutual written agreement between New York State (the lead contracting State) and the Contractor. Political subdivisions and other authorized entities within each participating State or governmental jurisdiction may also participate in any resultant contract if such State normally allows participation by such entities. New York State reserves the right to negotiate additional discounts based on any increased volume generated by such extensions.

USE OF RECYCLED OR REMANUFACTURED MATERIALS:

New York State, as a member of the Council of Great Lakes Governors, supports and encourages vendors to use recycled, remanufactured or recovered materials in the manufacture of products and packaging to the maximum extent practicable without jeopardizing the performance or intended end use of the product or packaging unless such use is precluded due to health or safety requirements or product specifications contained herein. Refurbished or remanufactured components or products are required to be restored to original performance and regulatory standards and functions and are required to meet all other requirements of this bid solicitation. Warranties on refurbished or remanufactured components or products must be identical to the manufacturer's new equipment warranty or industry's normal warranty when remanufacturer does not offer new equipment. See "Remanufactured, Recycled, Recyclable or Recovered Materials" §15 in Appendix B, OGS General Specifications.

ENVIRONMENTAL ATTRIBUTES AND NYS EXECUTIVE ORDER 4:

New York State is committed to environmental sustainability and endeavors to procure products with reduced environmental impact. One example of this commitment may be found in Executive Order No. 4 (Establishing a State Green Procurement and Agency Sustainability Program), which imposes certain requirements on state agencies, authorities, and public benefit corporations when procuring commodities, services, and technology. More information on Executive Order No. 4, including specifications for offerings covered by this Contract, may be found at http://ogs.ny.gov/EO/4/Default.asp. The Executive Order No. 4 specification for single use food containers and single use food service utensils adopted in May 2010, for example, requires all single use food containers, coatings, and single use food service utensils, to the maximum extent practicable, be compostable as defined under the ASTM Standard Specification for Compostable Plastics (D6400-04) and ASTM Standard Specification for Compostable Plastics Used as Coatings on Paper and Other Compostable Substrates (D6868-03) or, if such standard is not applicable, be biodegradable and where possible certified by the Biodegradable Products Institute (BPI). Similarly, specifications were adopted for hand soap/cleanser. Additional information on green cleaning requirements is set forth at https://greencleaning.ny.gov/Entry.asp State entities subject to Executive Order No. 4 are advised to become familiar with the specifications that have been developed in accordance with the Order, and to incorporate them, as applicable, when making purchases under this Contract.

MERCURY-ADDED CONSUMER PRODUCTS:

Contractors are advised that effective January 1, 2005, Article 27, Title 21 of the Environmental Conservation Law bans the sale or distribution free of charge of fever thermometers containing mercury except by prescription written

(Continued)

by a physician and bans the sale or distribution free of charge of elemental mercury other than for medical pre-encapsulated dental amalgam, research or manufacturing purposes due to the hazardous waste concerns of mercury. The law further states that effective July 12, 2005, manufacturers are required to label mercury-added consumer products that are sold or offered for sale in New York State by a distributor or retailer. The label is intended to inform consumers of the presence of mercury in such products and of the proper disposal or recycling of mercury-added consumer products. Offerers are encouraged to contact the Department of Environmental Conservation, Bureau of Solid Waste, Reduction & Recycling at (518) 402-8705 or the Bureau of Hazardous Waste Regulation at 1-800-462-6553 for questions relating to the law. Offerers may also visit the Department's web site for additional information: http://www.dec.ny.gov/chemical/8512.html

DIESEL EMISSION REDUCTION ACT:

Pursuant to N.Y. Environmental Conservation Law §19 0323 of the ("the Law") it is a requirement that heavy duty diesel vehicles in excess of 8,500 pounds use the best available retrofit technology ("BART") and ultra-low sulfur diesel fuel ("ULSD"). The requirement of the Law applies to all vehicles owned, operated by or on behalf of, or leased by State agencies and State or regional public authorities. It also requires that such vehicles owned, operated by or on behalf of, or leased by State agencies and State or regional public authorities with more than half of its governing body appointed by the Governor utilize BART.

The Law may be applicable to vehicles used by contract vendors "on behalf of" State agencies and public authorities and require certain reports from contract vendors. All heavy duty diesel vehicles must have BART by December 31, 2015 (unless further extended by Law). The Law also provides a list of exempted vehicles. Regulations set forth in 6 NYCRR Parts 248 and 249 provide further guidance. The Bidder hereby certifies and warrants that all heavy duty vehicles, as defined in NYECL §19 0323, to be used under this contract, will comply with the specifications and provisions of NYECL §19 0323, and 6 NYCRR Parts 248 and 249.

ELECTRONIC EQUIPMENT RECYCLING AND REUSE ACT:

Contractors should be aware of the NYS Department of Environmental Conservation (DEC) Electronic Equipment Recycling and Reuse Act which was signed into law in May 2010 and requires manufacturers to establish a convenient system for the collection, handling, and recycling or reuse of electronic waste. If Contractor is a manufacturer of covered electronic equipment, it must agree to comply with these requirements. More information regarding the Electronic Equipment Recycling and Reuse Act can be found on the DEC website at: http://www.dec.ny.gov/chemical/65583.html

NEW YORK STATE STATEWIDE FINANCIAL SYSTEM:

The New York State Statewide Financial System (SFS) went live for NYS agencies in April 2012. Future SFS procurement functionality envisions the ability to fully host Contract catalogs or to integrate Contractor-hosted punch-out catalogs. OGS reserves the right to integrate either of these future catalog functions with a Contractor during the contract period, and by submittal of a bid a Contractor agrees to coordinate with SFS for integration if OGS exercises its right to do so. No costs or expenses associated with providing information and integration shall be charged to NYS. Technical Requirements for the data elements, such as data types, maximum field lengths, and cXML element names shall be provided by SFS during integration. Upon completion of integration and activation of an SFS-based catalog ordering system, State agencies shall process their orders through the SFS functionality and the other Authorized Users shall continue to process orders in accordance with Contract terms and conditions, including through any Contractor-hosted web based ordering system. For more information on SFS, its use, and its capabilities please visit the SFS website here: http://www.sfs.ny.gov/.

POOR PERFORMANCE:

Authorized Users should notify Procurement Services' Customer Services promptly if the Contractor fails to meet the requirements of this contract. Performance which does not comply with requirements or is otherwise unsatisfactory to the Authorized User should also be reported to Customer Services:

Office of General Services Tel: 518-474-6717
Procurement Services Fax: 518-474-2437
Customer Services Coordination E-mail: customer.services@ogs.ny.gov

NOTICES:

(Continued)

All notices, demands, designations, certificates, requests, offers, consents, approvals and other instruments given pursuant to this Contract shall be in writing and shall be effective when mailed by registered or certified mail, or hand delivered, (i) if to the State, addressed to the State at its address set forth below, and (ii) if to Contractor, addressed to Contract Administrator at the address set forth in Contractor's Information document. Written notice of any alleged breach by one party to the other shall provide specific facts, circumstances and grounds upon which the breach is being declared.

TO STATE:
Contract Management Specialist I
Procurement Services
38th Floor, Corning Tower, Empire State Plaza
Albany, NY 12242
Telephone: 518-
Fax: 518-
E-mail: @ogs.ny.gov

ENTIRE AGREEMENT:

Authorized Users have no authority to modify the terms of the Contract, except to obtain better terms and pricing for a particular procurement than those set forth in the Contract. No preprinted terms or conditions on a Purchase Order issued by an Authorized User, which seek to vary the terms of this Contract or impose new duties or obligations on the Contractor, shall have any force or effect.

(Continued)

LOT A - DOT DRAWING 44

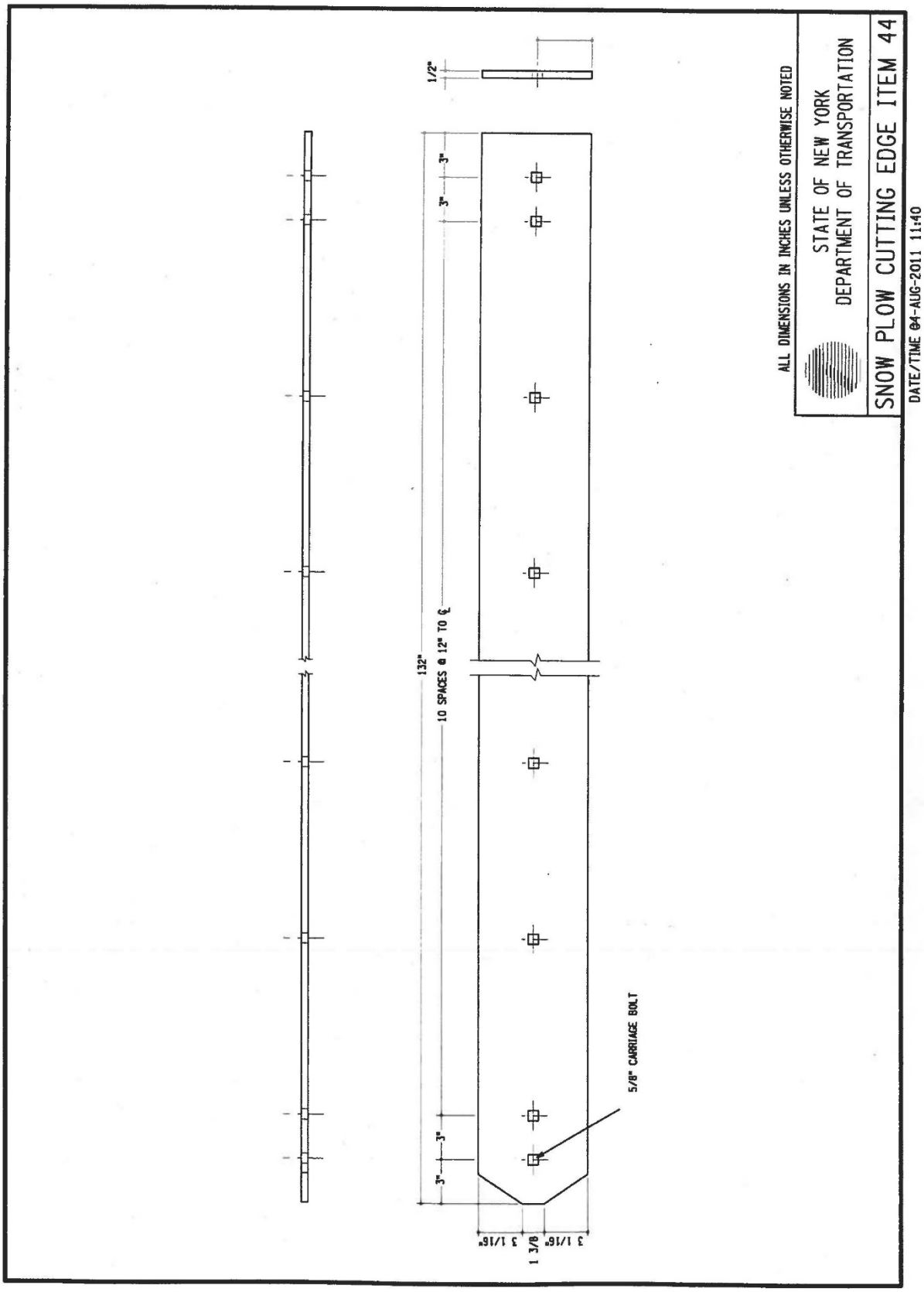

LOT A - DOT DRAWING 48

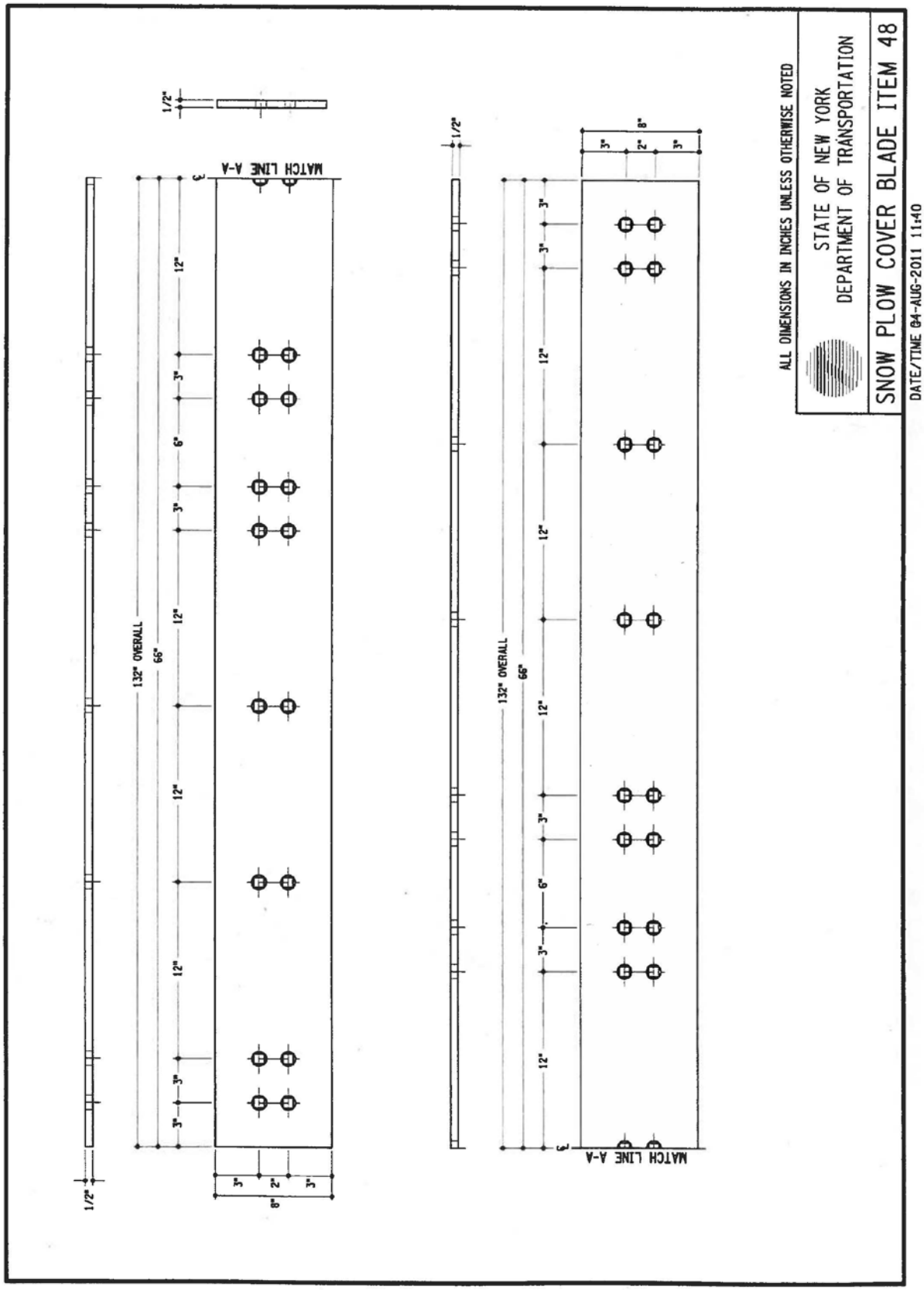

LOT B - DOT DRAWING 28

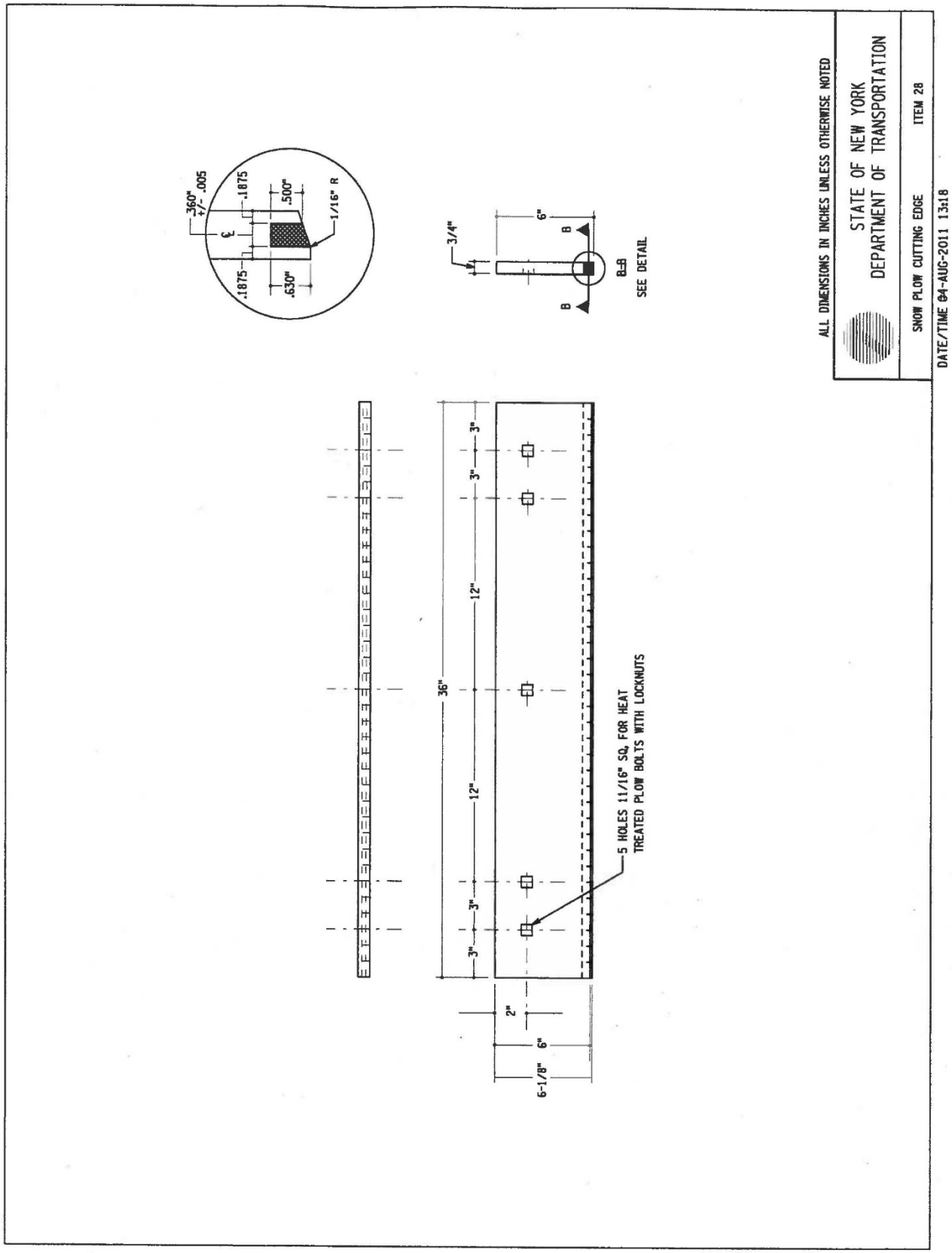

LOT B - DOT DRAWING 29

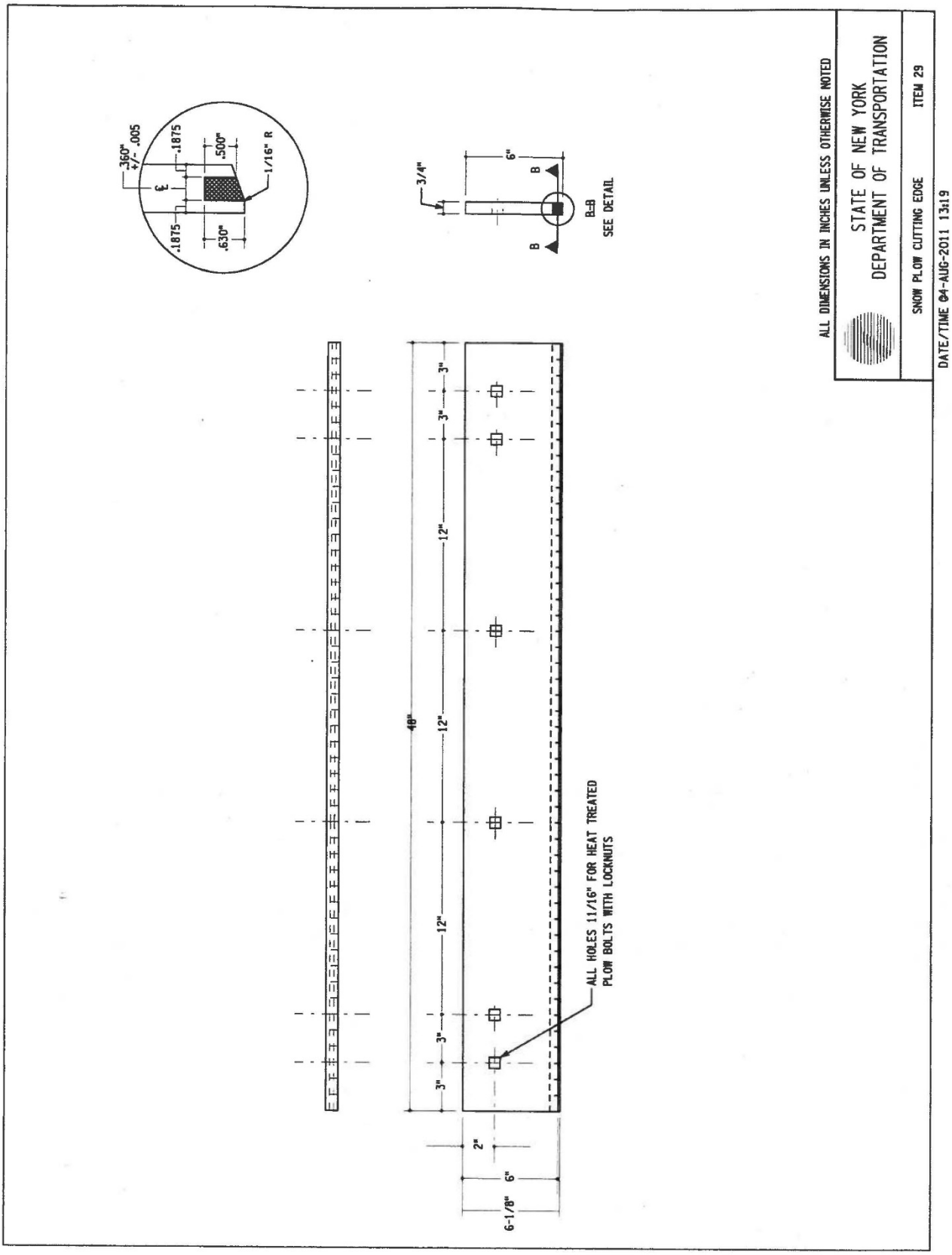

LOT C - DOT DRAWING 21

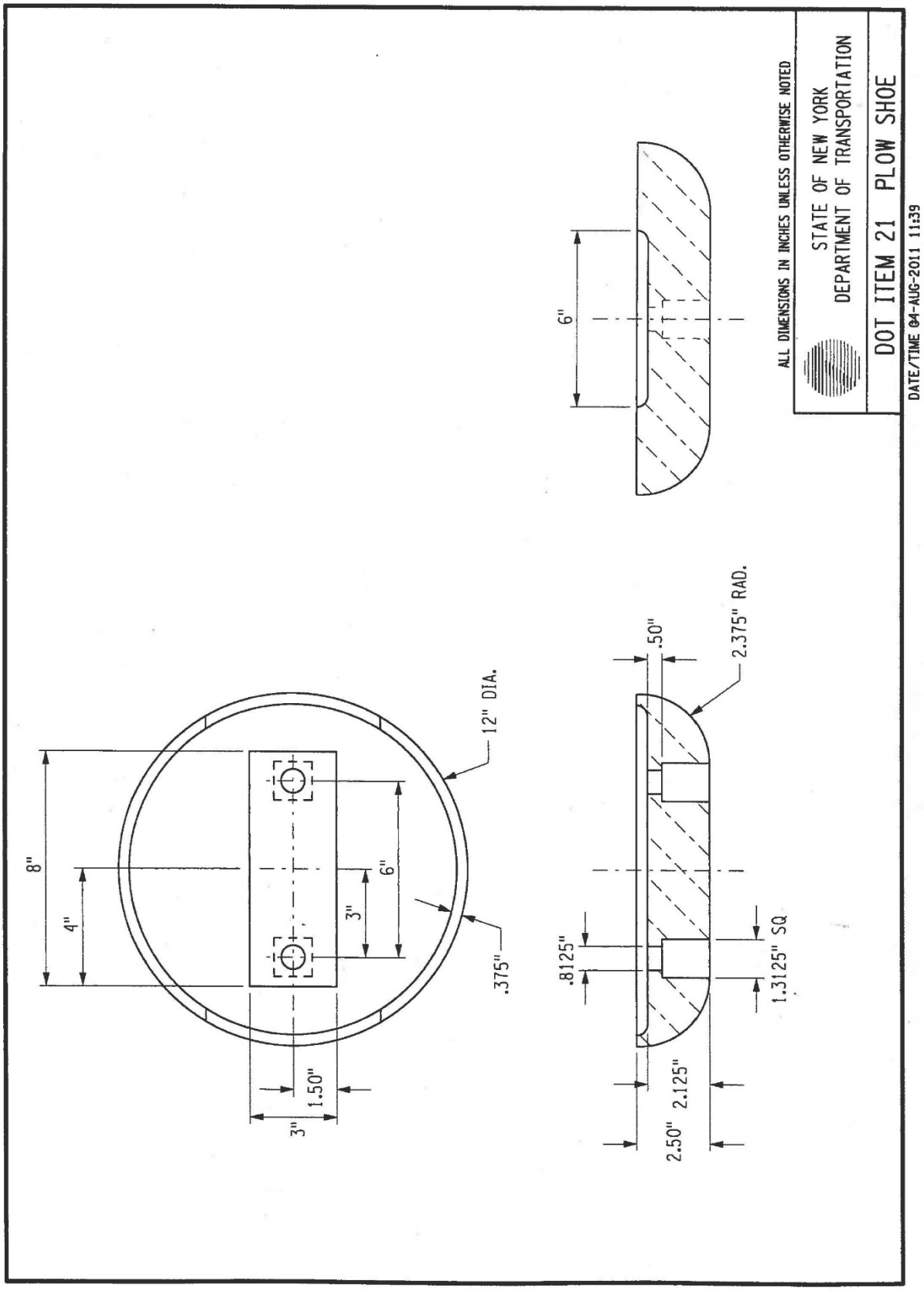

LOT D - DOT DRAWING 15 (1 of 3)

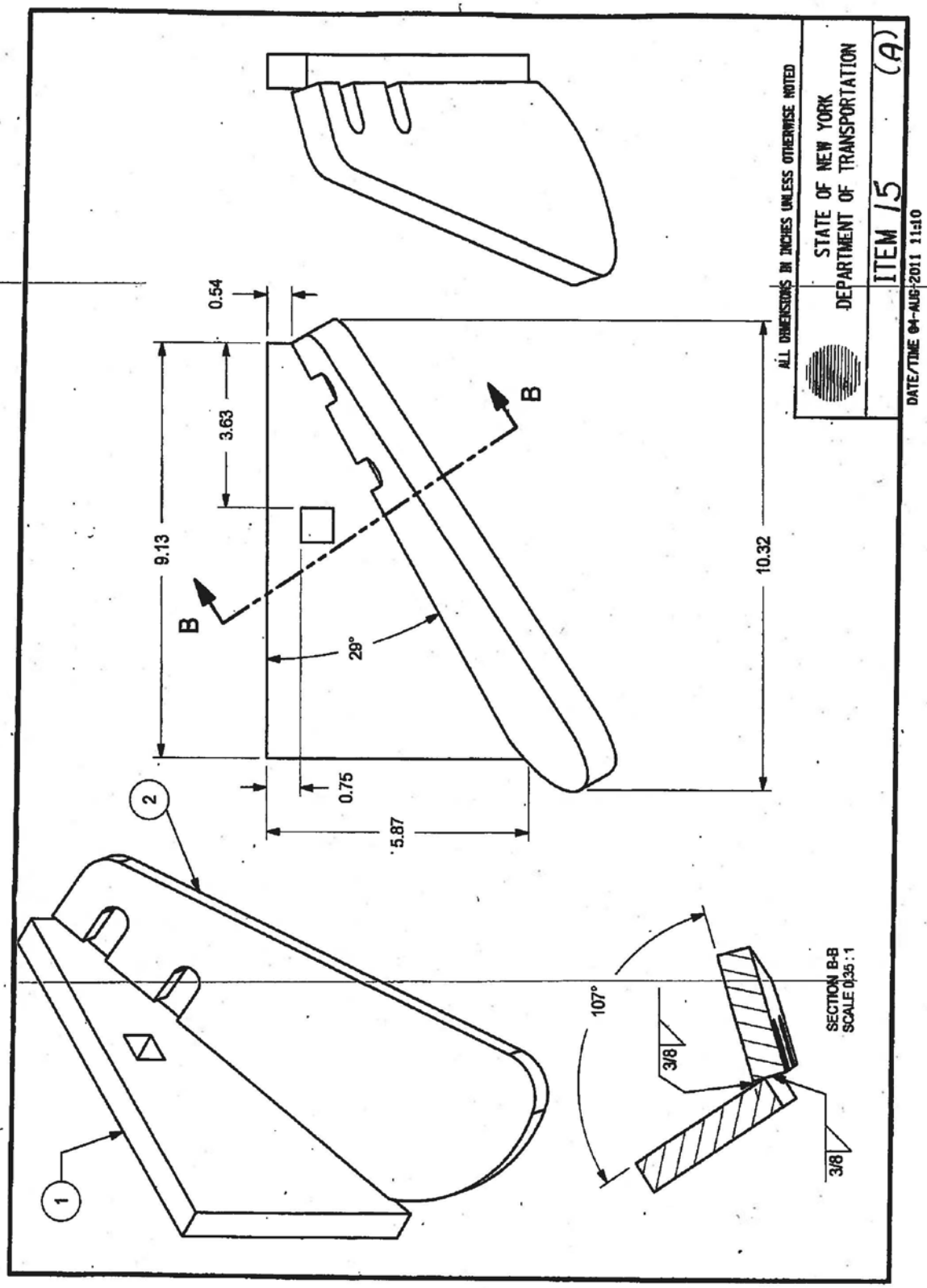

LOT D - DOT DRAWING 15 (2 of 3)

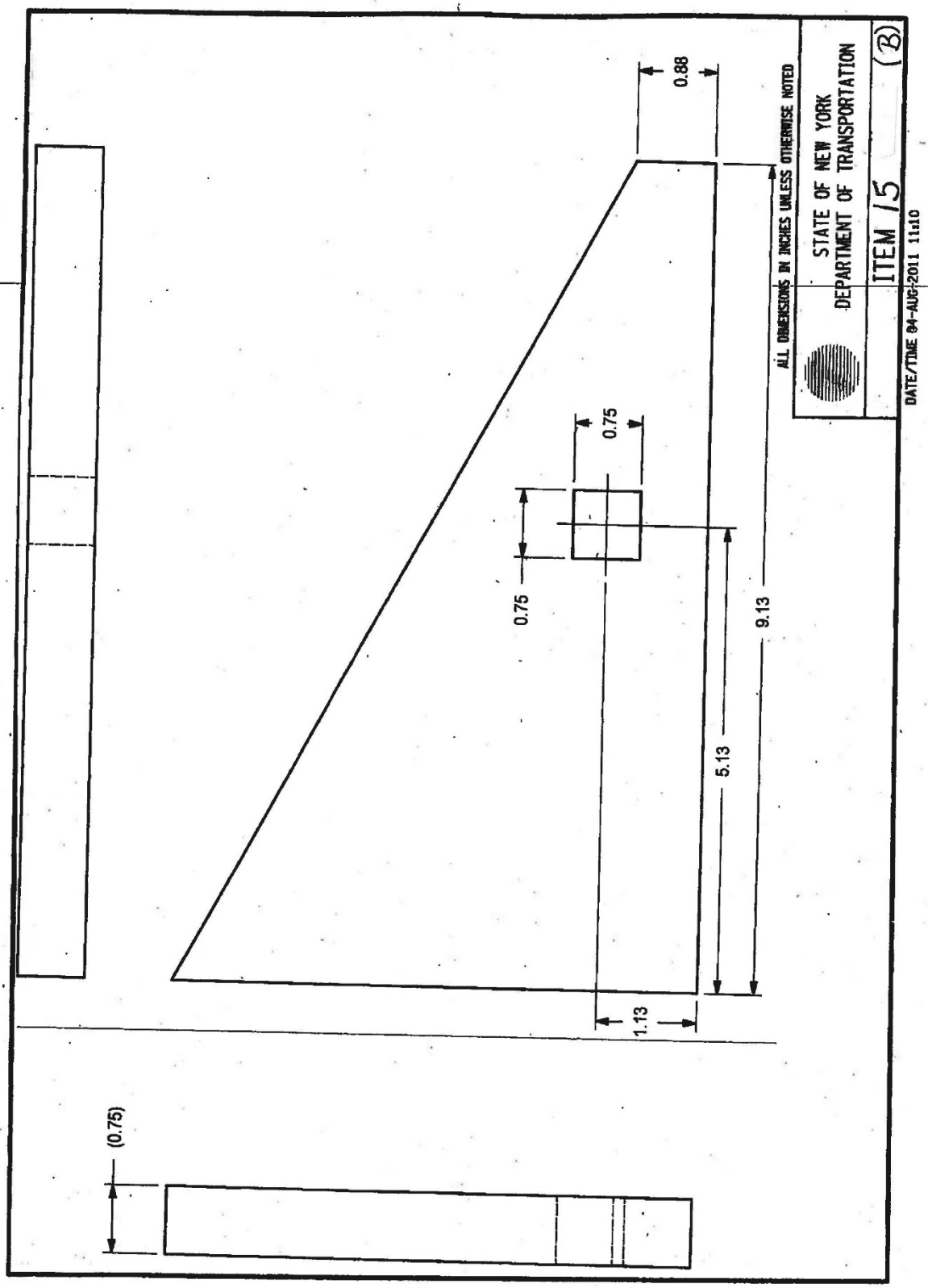

LOT D - DOT DRAWING 15 (3 of 3)

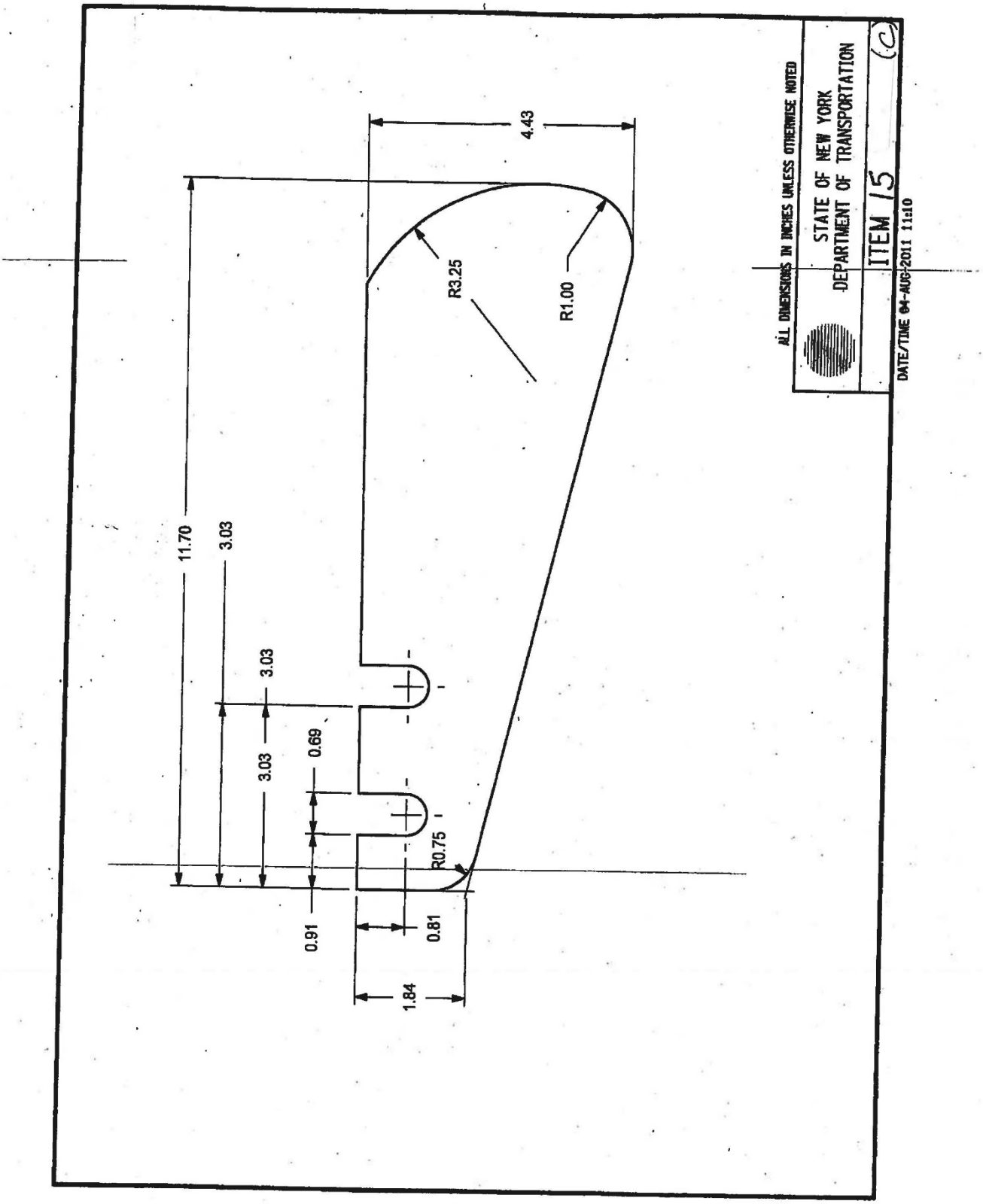

LOT D - DOT DRAWING 19A

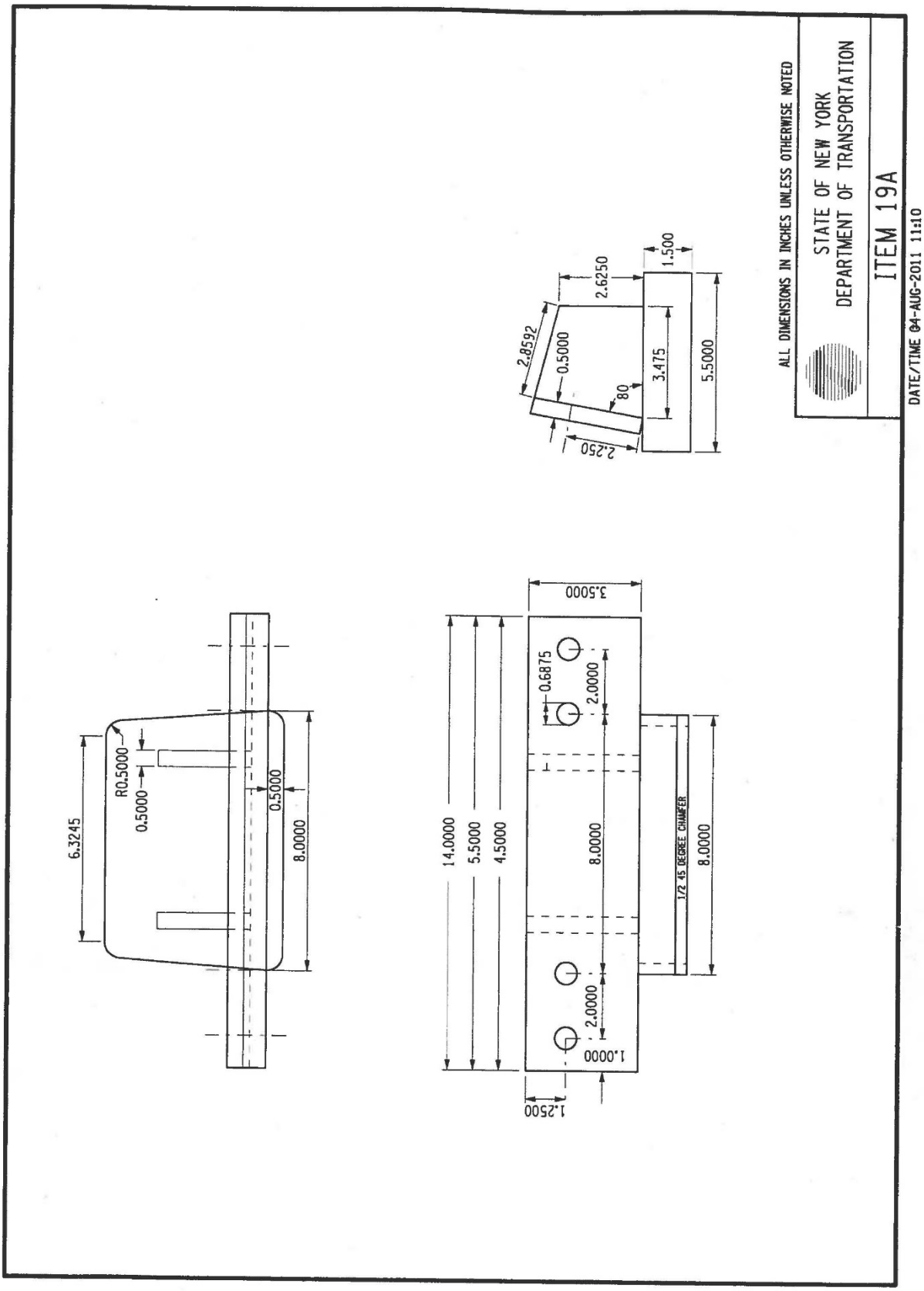

(Continued)

APPENDIX A

STANDARD CLAUSES FOR NEW YORK STATE CONTRACTS

(Continued)

TABLE OF CONTENTS

		Page
1.	Executory Clause	3
2.	Non-Assignment Clause	3
3.	Comptroller's Approval	3
4.	Workers' Compensation Benefits	3
5.	Non-Discrimination Requirements	3
6.	Wage and Hours Provisions	3-4
7.	Non-Collusive Bidding Certification	4
8.	International Boycott Prohibition	4
9.	Set-Off Rights	4
10.	Records	4
11.	Identifying Information and Privacy Notification	4-5
12.	Equal Employment Opportunities For Minorities and Women	5
13.	Conflicting Terms	5
14.	Governing Law	5
15.	Late Payment	5
16.	No Arbitration	6
17.	Service of Process	6
18.	Prohibition on Purchase of Tropical Hardwoods	6
19.	MacBride Fair Employment Principles	6
20.	Omnibus Procurement Act of 1992	6-7
21.	Reciprocity and Sanctions Provisions	7
22.	Compliance with New York State Information Security Breach and Notification Act	7
23.	Compliance with Consultant Disclosure Law	7
24.	Procurement Lobbying	7
25.	Certification of Registration to Collect Sales and Compensating Use Tax by Certain State Contractors, Affiliates and Subcontractors	7
26.	Iran Divestment Act	7

(Continued)

STANDARD CLAUSES FOR NYS CONTRACTS

The parties to the attached contract, license, lease, amendment or other agreement of any kind (hereinafter, "the contract" or "this contract") agree to be bound by the following clauses which are hereby made a part of the contract (the word "Contractor" herein refers to any party other than the State, whether a contractor, licenser, licensee, lessor, lessee or any other party):

1. EXECUTORY CLAUSE. In accordance with Section 41 of the State Finance Law, the State shall have no liability under this contract to the Contractor or to anyone else beyond funds appropriated and available for this contract.

2. NON-ASSIGNMENT CLAUSE. In accordance with Section 138 of the State Finance Law, this contract may not be assigned by the Contractor or its right, title or interest therein assigned, transferred, conveyed, sublet or otherwise disposed of without the State's previous written consent, and attempts to do so are null and void. Notwithstanding the foregoing, such prior written consent of an assignment of a contract let pursuant to Article XI of the State Finance Law may be waived at the discretion of the contracting agency and with the concurrence of the State Comptroller where the original contract was subject to the State Comptroller's approval, where the assignment is due to a reorganization, merger or consolidation of the Contractor's business entity or enterprise. The State retains its right to approve an assignment and to require that any Contractor demonstrate its responsibility to do business with the State. The Contractor may, however, assign its right to receive payments without the State's prior written consent unless this contract concerns Certificates of Participation pursuant to Article 5-A of the State Finance Law.

3. COMPTROLLER'S APPROVAL. In accordance with Section 112 of the State Finance Law (or, if this contract is with the State University or City University of New York, Section 355 or Section 6218 of the Education Law), if this contract exceeds $50,000 (or the minimum thresholds agreed to by the Office of the State Comptroller for certain S.U.N.Y. and C.U.N.Y. contracts), or if this is an amendment for any amount to a contract which, as so amended, exceeds said statutory amount, or if, by this contract, the State agrees to give something other than money when the value or reasonably estimated value of such consideration exceeds $10,000, it shall not be valid, effective or binding upon the State until it has been approved by the State Comptroller and filed in his office. Comptroller's approval of contracts let by the Office of General Services is required when such contracts exceed $85,000 (State Finance Law Section 163.6-a). However, such pre-approval shall not be required for any contract established as a centralized contract through the Office of General Services or for a purchase order or other transaction issued under such centralized contract.

4. WORKERS' COMPENSATION BENEFITS. In accordance with Section 142 of the State Finance Law, this contract shall be void and of no force and effect unless the Contractor shall provide and maintain coverage during the life of this contract for the benefit of such employees as are required to be covered by the provisions of the Workers' Compensation Law.

5. NON-DISCRIMINATION REQUIREMENTS. To the extent required by Article 15 of the Executive Law (also known as the Human Rights Law) and all other State and Federal statutory and constitutional non-discrimination provisions, the Contractor will not discriminate against any employee or applicant for employment because of race, creed, color, sex (including gender identity or expression), national origin, sexual orientation, military status, age, disability, predisposing genetic characteristics, marital status or domestic violence victim status. Furthermore, in accordance with Section 220-e of the Labor Law, if this is a contract for the construction, alteration or repair of any public building or public work or for the manufacture, sale or distribution of materials, equipment or supplies, and to the extent that this contract shall be performed within the State of New York, Contractor agrees that neither it nor its subcontractors shall, by reason of race, creed, color, disability, sex, or national origin: (a) discriminate in hiring against any New York State citizen who is qualified and available to perform the work; or (b) discriminate against or intimidate any employee hired for the performance of work under this contract. If this is a building service contract as defined in Section 230 of the Labor Law, then, in accordance with Section 239 thereof, Contractor agrees that neither it nor its subcontractors shall by reason of race, creed, color, national origin, age, sex or disability: (a) discriminate in hiring against any New York State citizen who is qualified and available to perform the work; or (b) discriminate against or intimidate any employee hired for the performance of work under this contract. Contractor is subject to fines of $50.00 per person per day for any violation of Section 220-e or Section 239 as well as possible termination of this contract and forfeiture of all moneys due hereunder for a second or subsequent violation.

6. WAGE AND HOURS PROVISIONS. If this is a public work contract covered by Article 8 of the Labor Law or a building service contract covered by Article 9 thereof, neither Contractor's employees nor the employees of its subcontractors may be required or permitted to work more than the number of hours or days stated in said statutes, except as otherwise provided in the Labor Law and as set forth in prevailing wage and supplement schedules issued by the State Labor Department. Furthermore, Contractor and its subcontractors must pay at least the prevailing wage

(Continued)

rate and pay or provide the prevailing supplements, including the premium rates for overtime pay, as determined by the State Labor Department in accordance with the Labor Law. Additionally, effective April 28, 2008, if this is a public work contract covered by Article 8 of the Labor Law, the Contractor understands and agrees that the filing of payrolls in a manner consistent with Subdivision 3-a of Section 220 of the Labor Law shall be a condition precedent to payment by the State of any State approved sums due and owing for work done upon the project.

7. NON-COLLUSIVE BIDDING CERTIFICATION. In accordance with Section 139-d of the State Finance Law, if this contract was awarded based upon the submission of bids, Contractor affirms, under penalty of perjury, that its bid was arrived at independently and without collusion aimed at restricting competition. Contractor further affirms that, at the time Contractor submitted its bid, an authorized and responsible person executed and delivered to the State a non-collusive bidding certification on Contractor's behalf.

8. INTERNATIONAL BOYCOTT PROHIBITION. In accordance with Section 220-f of the Labor Law and Section 139-h of the State Finance Law, if this contract exceeds $5,000, the Contractor agrees, as a material condition of the contract, that neither the Contractor nor any substantially owned or affiliated person, firm, partnership or corporation has participated, is participating, or shall participate in an international boycott in violation of the federal Export Administration Act of 1979 (50 USC App. Sections 2401 et seq.) or regulations thereunder. If such Contractor, or any of the aforesaid affiliates of Contractor, is convicted or is otherwise found to have violated said laws or regulations upon the final determination of the United States Commerce Department or any other appropriate agency of the United States subsequent to the contract's execution, such contract, amendment or modification thereto shall be rendered forfeit and void. The Contractor shall so notify the State Comptroller within five (5) business days of such conviction, determination or disposition of appeal (2NYCRR 105.4).

9. SET-OFF RIGHTS. The State shall have all of its common law, equitable and statutory rights of set-off. These rights shall include, but not be limited to, the State's option to withhold for the purposes of set-off any moneys due to the Contractor under this contract up to any amounts due and owing to the State with regard to this contract, any other contract with any State department or agency, including any contract for a term commencing prior to the term of this contract, plus any amounts due and owing to the State for any other reason including, without limitation, tax delinquencies, fee delinquencies or monetary penalties relative thereto. The State shall exercise its set-off rights in accordance with normal State practices including, in cases of set-off pursuant to an audit, the finalization of such audit by the State agency, its representatives, or the State Comptroller.

10. RECORDS. The Contractor shall establish and maintain complete and accurate books, records, documents, accounts and other evidence directly pertinent to performance under this contract (hereinafter, collectively, "the Records"). The Records must be kept for the balance of the calendar year in which they were made and for six (6) additional years thereafter. The State Comptroller, the Attorney General and any other person or entity authorized to conduct an examination, as well as the agency or agencies involved in this contract, shall have access to the Records during normal business hours at an office of the Contractor within the State of New York or, if no such office is available, at a mutually agreeable and reasonable venue within the State, for the term specified above for the purposes of inspection, auditing and copying. The State shall take reasonable steps to protect from public disclosure any of the Records which are exempt from disclosure under Section 87 of the Public Officers Law (the "Statute") provided that: (i) the Contractor shall timely inform an appropriate State official, in writing, that said records should not be disclosed; and (ii) said records shall be sufficiently identified; and (iii) designation of said records as exempt under the Statute is reasonable. Nothing contained herein shall diminish, or in any way adversely affect, the State's right to discovery in any pending or future litigation.

11. IDENTIFYING INFORMATION AND PRIVACY NOTIFICATION. (a) Identification Number(s). Every invoice or New York State Claim for Payment submitted to a New York State agency by a payee, for payment for the sale of goods or services or for transactions (e.g., leases, easements, licenses, etc.) related to real or personal property must include the payee's identification number. The number is any or all of the following: (i) the payee's Federal employer identification number, (ii) the payee's Federal social security number, and/or (iii) the payee's Vendor Identification Number assigned by the Statewide Financial System. Failure to include such number or numbers may delay payment. Where the payee does not have such number or numbers, the payee, on its invoice or Claim for Payment, must give the reason or reasons why the payee does not have such number or numbers.

(b) Privacy Notification. (1) The authority to request the above personal information from a seller of goods or services or a lessor of real or personal property, and the authority to maintain such information, is found in Section 5 of the State Tax Law. Disclosure of this information by the seller or lessor to the State is mandatory. The principal purpose for which the information is collected is to enable the State to identify individuals, businesses and others who have been delinquent in filing tax returns or may have

(Continued)

understated their tax liabilities and to generally identify persons affected by the taxes administered by the Commissioner of Taxation and Finance. The information will be used for tax administration purposes and for any other purpose authorized by law. (2) The personal information is requested by the purchasing unit of the agency contracting to purchase the goods or services or lease the real or personal property covered by this contract or lease. The information is maintained in the Statewide Financial System by the Vendor Management Unit within the Bureau of State Expenditures, Office of the State Comptroller, 110 State Street, Albany, New York 12236.

12. EQUAL EMPLOYMENT OPPORTUNITIES FOR MINORITIES AND WOMEN. In accordance with Section 312 of the Executive Law and 5 NYCRR 143, if this contract is: (i) a written agreement or purchase order instrument, providing for a total expenditure in excess of $25,000.00, whereby a contracting agency is committed to expend or does expend funds in return for labor, services, supplies, equipment, materials or any combination of the foregoing, to be performed for, or rendered or furnished to the contracting agency; or (ii) a written agreement in excess of $100,000.00 whereby a contracting agency is committed to expend or does expend funds for the acquisition, construction, demolition, replacement, major repair or renovation of real property and improvements thereon; or (iii) a written agreement in excess of $100,000.00 whereby the owner of a State assisted housing project is committed to expend or does expend funds for the acquisition, construction, demolition, replacement, major repair or renovation of real property and improvements thereon for such project, then the following shall apply and by signing this agreement the Contractor certifies and affirms that it is Contractor's equal employment opportunity policy that:

(a) The Contractor will not discriminate against employees or applicants for employment because of race, creed, color, national origin, sex, age, disability or marital status, shall make and document its conscientious and active efforts to employ and utilize minority group members and women in its work force on State contracts and will undertake or continue existing programs of affirmative action to ensure that minority group members and women are afforded equal employment opportunities without discrimination. Affirmative action shall mean recruitment, employment, job assignment, promotion, upgradings, demotion, transfer, layoff, or termination and rates of pay or other forms of compensation;

(b) at the request of the contracting agency, the Contractor shall request each employment agency, labor union, or authorized representative of workers with which it has a collective bargaining or other agreement or understanding, to furnish a written statement that such employment agency, labor union or representative will not discriminate on the basis of race, creed, color, national origin, sex, age, disability or marital status and that such union or representative will affirmatively cooperate in the implementation of the Contractor's obligations herein; and

(c) the Contractor shall state, in all solicitations or advertisements for employees, that, in the performance of the State contract, all qualified applicants will be afforded equal employment opportunities without discrimination because of race, creed, color, national origin, sex, age, disability or marital status.

Contractor will include the provisions of "a", "b", and "c" above, in every subcontract over $25,000.00 for the construction, demolition, replacement, major repair, renovation, planning or design of real property and improvements thereon (the "Work") except where the Work is for the beneficial use of the Contractor. Section 312 does not apply to: (i) work, goods or services unrelated to this contract; or (ii) employment outside New York State. The State shall consider compliance by a contractor or subcontractor with the requirements of any federal law concerning equal employment opportunity which effectuates the purpose of this section. The contracting agency shall determine whether the imposition of the requirements of the provisions hereof duplicate or conflict with any such federal law and if such duplication or conflict exists, the contracting agency shall waive the applicability of Section 312 to the extent of such duplication or conflict. Contractor will comply with all duly promulgated and lawful rules and regulations of the Department of Economic Development's Division of Minority and Women's Business Development pertaining hereto.

13. CONFLICTING TERMS. In the event of a conflict between the terms of the contract (including any and all attachments thereto and amendments thereof) and the terms of this Appendix A, the terms of this Appendix A shall control.

14. GOVERNING LAW. This contract shall be governed by the laws of the State of New York except where the Federal supremacy clause requires otherwise.

15. LATE PAYMENT. Timeliness of payment and any interest to be paid to Contractor for late payment shall be governed by Article 11-A of the State Finance Law to the extent required by law.

16. NO ARBITRATION. Disputes involving this contract, including the breach or alleged breach thereof, may not be submitted to binding arbitration (except where statutorily authorized), but must, instead, be heard in a court of competent jurisdiction of the State of New York.

(Continued)

17. SERVICE OF PROCESS. In addition to the methods of service allowed by the State Civil Practice Law & Rules ("CPLR"), Contractor hereby consents to service of process upon it by registered or certified mail, return receipt requested. Service hereunder shall be complete upon Contractor's actual receipt of process or upon the State's receipt of the return thereof by the United States Postal Service as refused or undeliverable. Contractor must promptly notify the State, in writing, of each and every change of address to which service of process can be made. Service by the State to the last known address shall be sufficient. Contractor will have thirty (30) calendar days after service hereunder is complete in which to respond.

18. PROHIBITION ON PURCHASE OF TROPICAL HARDWOODS. The Contractor certifies and warrants that all wood products to be used under this contract award will be in accordance with, but not limited to, the specifications and provisions of Section 165 of the State Finance Law, (Use of Tropical Hardwoods) which prohibits purchase and use of tropical hardwoods, unless specifically exempted, by the State or any governmental agency or political subdivision or public benefit corporation. Qualification for an exemption under this law will be the responsibility of the contractor to establish to meet with the approval of the State.

In addition, when any portion of this contract involving the use of woods, whether supply or installation, is to be performed by any subcontractor, the prime Contractor will indicate and certify in the submitted bid proposal that the subcontractor has been informed and is in compliance with specifications and provisions regarding use of tropical hardwoods as detailed in §165 State Finance Law. Any such use must meet with the approval of the State; otherwise, the bid may not be considered responsive. Under bidder certifications, proof of qualification for exemption will be the responsibility of the Contractor to meet with the approval of the State.

19. MACBRIDE FAIR EMPLOYMENT PRINCIPLES. In accordance with the MacBride Fair Employment Principles (Chapter 807 of the Laws of 1992), the Contractor hereby stipulates that the Contractor either (a) has no business operations in Northern Ireland, or (b) shall take lawful steps in good faith to conduct any business operations in Northern Ireland in accordance with the MacBride Fair Employment Principles (as described in Section 165 of the New York State Finance Law), and shall permit independent monitoring of compliance with such principles.

20. OMNIBUS PROCUREMENT ACT OF 1992. It is the policy of New York State to maximize opportunities for the participation of New York State business enterprises, including minority and women-owned business enterprises as bidders, subcontractors and suppliers on its procurement contracts.

Information on the availability of New York State subcontractors and suppliers is available from:

NYS Department of Economic Development
Division for Small Business
Albany, New York 12245
Telephone: 518-292-5100
Fax: 518-292-5884
email: opa@esd.ny.gov

A directory of certified minority and women-owned business enterprises is available from:

NYS Department of Economic Development
Division of Minority and Women's Business Development
633 Third Avenue
New York, NY 10017
212-803-2414
email: mwbecertification@esd.ny.gov
https://ny.newnycontracts.com/FrontEnd/VendorSearchPublic.asp

The Omnibus Procurement Act of 1992 requires that by signing this bid proposal or contract, as applicable, Contractors certify that whenever the total bid amount is greater than $1 million:

(a) The Contractor has made reasonable efforts to encourage the participation of New York State Business Enterprises as suppliers and subcontractors, including certified minority and women-owned business enterprises, on this project, and has retained the documentation of these efforts to be provided upon request to the State;

(b) The Contractor has complied with the Federal Equal Opportunity Act of 1972 (P.L. 92-261), as amended;

(c) The Contractor agrees to make reasonable efforts to provide notification to New York State residents of employment opportunities on this project through listing any such positions with the Job Service Division of the New York State Department of Labor, or providing such notification in such manner as is consistent with existing collective bargaining contracts or agreements. The Contractor agrees to document these efforts and to provide said documentation to the State upon request; and

(d) The Contractor acknowledges notice that the State may seek to obtain offset credits from foreign countries as a result of this contract and agrees to cooperate with the State in these efforts.

(Continued)

21. RECIPROCITY AND SANCTIONS PROVISIONS. Bidders are hereby notified that if their principal place of business is located in a country, nation, province, state or political subdivision that penalizes New York State vendors, and if the goods or services they offer will be substantially produced or performed outside New York State, the Omnibus Procurement Act 1994 and 2000 amendments (Chapter 684 and Chapter 383, respectively) require that they be denied contracts which they would otherwise obtain. NOTE: As of May 15, 2002, the list of discriminatory jurisdictions subject to this provision includes the states of South Carolina, Alaska, West Virginia, Wyoming, Louisiana and Hawaii. Contact NYS Department of Economic Development for a current list of jurisdictions subject to this provision.

22. COMPLIANCE WITH NEW YORK STATE INFORMATION SECURITY BREACH AND NOTIFICATION ACT. Contractor shall comply with the provisions of the New York State Information Security Breach and Notification Act (General Business Law Section 899-aa; State Technology Law Section 208).

23. COMPLIANCE WITH CONSULTANT DISCLOSURE LAW. If this is a contract for consulting services, defined for purposes of this requirement to include analysis, evaluation, research, training, data processing, computer programming, engineering, environmental, health, and mental health services, accounting, auditing, paralegal, legal or similar services, then, in accordance with Section 163 (4-g) of the State Finance Law (as amended by Chapter 10 of the Laws of 2006), the Contractor shall timely, accurately and properly comply with the requirement to submit an annual employment report for the contract to the agency that awarded the contract, the Department of Civil Service and the State Comptroller.

24. PROCUREMENT LOBBYING. To the extent this agreement is a "procurement contract" as defined by State Finance Law Sections 139-j and 139-k, by signing this agreement the contractor certifies and affirms that all disclosures made in accordance with State Finance Law Sections 139-j and 139-k are complete, true and accurate. In the event such certification is found to be intentionally false or intentionally incomplete, the State may terminate the agreement by providing written notification to the Contractor in accordance with the terms of the agreement.

25. CERTIFICATION OF REGISTRATION TO COLLECT SALES AND COMPENSATING USE TAX BY CERTAIN STATE CONTRACTORS, AFFILIATES AND SUBCONTRACTORS.
To the extent this agreement is a contract as defined by Tax Law Section 5-a, if the contractor fails to make the certification required by Tax Law Section 5-a or if during the term of the contract, the Department of Taxation and Finance or the covered agency, as defined by Tax Law 5-a, discovers that the certification, made under penalty of perjury, is false, then such failure to file or false certification shall be a material breach of this contract and this contract may be terminated, by providing written notification to the Contractor in accordance with the terms of the agreement, if the covered agency determines that such action is in the best interest of the State.

26. **IRAN DIVESTMENT ACT**. By entering into this Agreement, Contractor certifies in accordance with State Finance Law §165-a that it is not on the "Entities Determined to be Non-Responsive Bidders/Offerers pursuant to the New York State Iran Divestment Act of 2012" ("Prohibited Entities List") posted at: http://www.ogs.ny.gov/about/regs/docs/ListofEntities.pdf

Contractor further certifies that it will not utilize on this Contract any subcontractor that is identified on the Prohibited Entities List. Contractor agrees that should it seek to renew or extend this Contract, it must provide the same certification at the time the Contract is renewed or extended. Contractor also agrees that any proposed Assignee of this Contract will be required to certify that it is not on the Prohibited Entities List before the contract assignment will be approved by the State.

During the term of the Contract, should the state agency receive information that a person (as defined in State Finance Law §165-a) is in violation of the above-referenced certifications, the state agency will review such information and offer the person an opportunity to respond. If the person fails to demonstrate that it has ceased its engagement in the investment activity which is in violation of the Act within 90 days after the determination of such violation, then the state agency shall take such action as may be appropriate and provided for by law, rule, or contract, including, but not limited to, imposing sanctions, seeking compliance, recovering damages, or declaring the Contractor in default.

The state agency reserves the right to reject any bid, request for assignment, renewal or extension for an entity that appears on the Prohibited Entities List prior to the award, assignment, renewal or extension of a contract, and to pursue a responsibility review with respect to any entity that is awarded a contract and appears on the Prohibited Entities list after contract award.

.

(Continued)

THIS PAGE IS INTENTIONALLY LEFT BLANK

APPENDIX B

GENERAL SPECIFICATIONS

(Continued)

TABLE OF CONTENTS

GENERAL **PAGE**

1. Ethics Compliance 1
2. Definitions 1

BID SUBMISSION

3. International Bidding 2
4. Bid Opening 2
5. Bid Submission 3
6. Late Bids Rejected 3
7. Bid Contents 3
8. Extraneous Terms 3
9. Confidential/Trade Secret Materials 3
10. Prevailing Wage Rates - Public Works and Building Services Contracts 4
11. Taxes 5
12. Expenses Prior to Contract Execution 5
13. Advertising Results 5
14. Product References 5
15. Remanufactured, Recycled, Recyclable Or Recovered Materials 5
16. Products Manufactured in Public Institutions 5
17. Pricing 5
18. Drawings 6
19. Site Inspection 6
20. Procurement Card 6
21. Samples 6

BID EVALUATION

22. Bid Evaluation 7
23. Tie Bids 7
24. Quantity Changes Prior To Award 7
25. Timeframe for Offers 7

TERMS & CONDITIONS

26. Contract Creation/Execution 7
27. Participation in Centralized Contracts 7
28. Modification of Contract Terms 8
29. Scope Changes 8
30. Estimated/Specific Quantity Contracts 8
31. Emergency Contracts 8
32. Purchase Orders 8
33. Product Delivery 9
34. Weekend and Holiday Deliveries 9
35. Shipping/Receipt of Product 9

TERMS & CONDITIONS (CONT.) **PAGE**

36. Title and Risk of Loss 9
37. Re-Weighing Product 9
38. Product Substitution 9
39. Rejected Product 9
40. Installation 9
41. Repaired or Replaced Product/ Components 10
42. Employees/Subcontractors/Agents 10
43. Assignment 10
44. Subcontractors and Suppliers 10
45. Performance/Bid Bond 10
46. Suspension of Work 10
47. Termination 10
48. Savings/Force Majeure 11
49. Contract Invoicing 12
50. Default - Authorized User 12
51. Prompt Payments 12
52. Remedies for Breach 13
53. Assignment of Claim 13
54. Toxic Substances 13
55. Independent Contractor 13
56. Security 13
57. Cooperation with Third Parties 13
58. Contract Term - Renewal 13
59. Warranties 13
60. Legal Compliance 15
61. Indemnification 15
62. Indemnification Relating to Third Party Rights 15
63. Limitation of Liability 16
64. Disputes 16

THE FOLLOWING CLAUSES PERTAIN TO TECHNOLOGY & NEGOTIATED CONTRACTS

65. Software License Grant 17
66. Product Acceptance 18
67. Audit of Licensed Product Usage 19
68. Ownership/Title to Project Deliverables 19
69. Proof of License 20
70. Product Version 20
71. Changes to Product or Service Offerings 20
72. No Hardstop/Passive License Monitoring 21
73. Source Code Escrow for Licensed Product 21

(Continued)

GENERAL

1. ETHICS COMPLIANCE All Bidders/Contractors and their employees must comply with the requirements of Sections 73 and 74 of the Public Officers Law, other State codes, rules, regulations and executive orders establishing ethical standards for the conduct of business with New York State. In signing the Bid, Bidder certifies full compliance with those provisions for any present or future dealings, transactions, sales, contracts, services, offers, relationships, etc., involving New York State and/or its employees. Failure to comply with those provisions may result in disqualification from the Bidding process, termination of contract, and/or other civil or criminal proceedings as required by law.

2. DEFINITIONS Terms used herein shall have the following meanings:

a. AGENCY OR AGENCIES The State of New York, acting by or through one or more departments, boards, commissions, offices or institutions of the State of New York.

b. AUTHORIZED USER(S) Authorized User shall have the meaning set forth in New York State Finance Law section 163(1)(k) and includes, but is not limited to, New York State agencies, political subdivisions, local governments, public authorities, public school and fire districts, public and nonprofit libraries, and certain other nonpublic/nonprofit organizations.

c. COMMISSIONER Commissioner of OGS, or in the case of Bid Specifications issued by an Authorized User, the head of such Authorized User or his or her authorized representative.

d. CONTRACT The writing(s) which contain the agreement of the Commissioner and the bidder/Contractor setting forth the total legal obligation between the parties as determined by applicable rules of law, and which most typically include the following classifications of public procurements:

1. **Agency Specific Contracts** Contracts where the specifications for a Product or a particular scope of work are described and defined to meet the needs of one or more Authorized User(s).

2. **Centralized Contracts** Single or multiple award Contracts where the specifications for a Product or general scope of work are described and defined by the Office of General Services to meet the needs of Authorized Users. Centralized Contracts may be awarded through multiple awards or through adoption of another jurisdiction's contract or on a sole source, single source, emergency or competitive basis. Once established, procurements may be made from the selected Contractor(s) without further competition or Mini-Bid unless otherwise required by the Bid Specifications or Contract Award Notification.

3. **Back-Drop Contracts** Multiple award Centralized Contracts where the Office of General Services defines the specifications for a Product or general scope of work to meet the needs of Authorized Users. Bids may be submitted either at a date and time certain or may be accepted on a continuous or periodic recruitment basis, as set forth in the Bid Specifications. Selection of a Contractor(s) from among Back-Drop contract holders for an actual Product, project or particular scope of work may subsequently be made on a single or sole source basis, or on the basis of a Mini-Bid among qualified Back-Drop contract holders, or such other method as set forth in the Bid Document.

4. **Piggyback Contract** A Contract let by any department, agency or instrumentality of the United States government, or any department, agency, office, political subdivision or instrumentality of any state or state(s) which is adopted and extended for use by the OGS Commissioner in accordance with the requirements of the State Finance Law.

5. **Contract Letter** A letter to the successful Bidder(s) indicating acceptance of its Bid in response to a solicitation. Unless otherwise specified, the issuance of a Letter of Acceptance forms a Contract but is not an order for Product, and Contractor should not take any action with respect to actual Contract deliveries except on the basis of Purchase Orders sent from Authorized User(s).

e. CONTRACT AWARD NOTIFICATION An announcement to Authorized Users that a Contract has been established.

f. CONTRACTOR Any successful Bidder(s) to whom a Contract has been awarded by the Commissioner.

g. DOCUMENTATION The complete set of manuals (e.g., user, installation, instruction or diagnostic manuals) in either hard or electronic copy, which are necessary to enable an Authorized User to properly test, install, operate and enjoy full use of the Product.

h. EMERGENCY An urgent and unexpected requirement where health and public safety or the conservation of public resources is at risk.

i. ENTERPRISE The total business operations in the United States of Authorized User(s) without regard to geographic location where such operations are performed or the entity actually performing such operations on behalf of Authorized User(s).

j. ENTERPRISE LICENSE A license grant of unlimited rights to deploy, access, use and execute Product anywhere within the Enterprise up to the maximum capacity stated on the Purchase Order or in the Contract.

k. ERROR CORRECTIONS Machine executable software code furnished by Contractor which corrects the Product so as to conform to the applicable warranties, performance standards and/or obligations of the Contractor.

l. GROUP A classification of Product, services or technology which is designated by OGS.

m. INVITATION FOR BIDS (IFB) A type of Bid Document which is most typically used for procurements where requirements can be stated and award will be made based on lowest price to the responsive and responsible Bidder(s).

(Continued)

n. LICENSED SOFTWARE Software transferred upon the terms and conditions set forth in the Contract. "Licensed Software" includes error corrections, upgrades, enhancements or new releases, and any deliverables due under a maintenance or service contract (e.g., patches, fixes, PTFs, programs, code or data conversion, or custom programming).

o. LICENSEE(S) One or more Authorized Users who acquire Product from Contractor by issuing a Purchase Order in accordance with the terms and conditions of the Contract; provided that, for purposes of compliance with an individual license, the term "Licensee(s)" shall be deemed to refer separately to the individual Authorized User(s) who took receipt of and who is executing the Product, and who shall be solely responsible for performance and liabilities incurred. In the case of acquisitions by State Agencies, the Licensee shall be the State of New York.

p. LICENSE EFFECTIVE DATE The date Product is delivered to an Authorized User. Where a License involves Licensee's right to copy a previously licensed and delivered Master Copy of a Program, the license effective date for additional copies shall be deemed to be the date on which the Purchase Order is executed.

q. LICENSOR A Contractor who transfers rights in proprietary Product to Authorized Users in accordance with the rights and obligations specified in the Contract.

r. NEW PRODUCT RELEASES (Product Revisions) Any commercially released revisions to the licensed version of a Product as may be generally offered and available to Authorized Users. New releases involve a substantial revision of functionality from a previously released version of the Product.

s. OGS The New York State Office of General Services.

t. PRODUCT A deliverable under any Bid or Contract which may include commodities, services and/or technology. The term "Product" includes Licensed Software.

u. PROPRIETARY Protected by secrecy, patent, copyright or trademark against commercial competition.

v. PURCHASE ORDER The Authorized User's fiscal form or format that is used when making a purchase (e.g., formal written Purchase Order, Procurement Card, electronic Purchase Order, or other authorized instrument).

w. REQUEST FOR PROPOSALS (RFP) A type of Bid Document that is used for procurements where factors in addition to cost are considered and weighted in awarding the contract and where the award will be made based on "best value," as defined by the State Finance Law, to the responsive and responsible Bidder(s).

x. REQUEST FOR QUOTATION (RFQ) A type of Bid Document that can be used when a formal Bid opening is not required (e.g., discretionary, sole source, single source or emergency purchases).

y. RESPONSIBLE BIDDER A Bidder that is determined to have financial and organizational capacity, legal authority, satisfactory previous performance, skill, judgment and integrity, and that is found to be competent, reliable and experienced, as determined by the Commissioner. For purposes of being deemed responsible, a Bidder must also be determined to be in compliance with Sections 139-j and 139-k of the State Finance Law relative to restrictions on contacts during the procurement process and disclosure of contacts and prior findings of non-responsibility under these statutes.

z. RESPONSIVE BIDDER A Bidder meeting the specifications or requirements prescribed in the Bid Document or solicitation, as determined by the OGS Commissioner.

aa. SINGLE SOURCE A procurement where two or more Bidders can supply the required Product, and the Commissioner may award the contract to one Bidder over the other.

bb. SITE The location (street address) where Product will be executed or services delivered.

cc. SOLE SOURCE A procurement where only one Bidder is capable of supplying the required Product.

dd. SOURCE CODE The programming statements or instructions written and expressed in any language understandable by a human being skilled in the art which are translated by a language compiler to produce executable machine Object Code.

ee. STATE State of New York.

ff. SUBCONTRACTOR Any individual or other legal entity (including but not limited to sole proprietor, partnership, limited liability company, firm or corporation) who has entered into a contract, express or implied, for the performance of a portion of a Contract with a Contractor.

gg. TERMS OF LICENSE The terms and conditions set forth in the Contract that are in effect and applicable to a Purchase Order at the time of order placement.

hh. VIRUS Any computer code, whether or not written or conceived by Contractor, that disrupts, disables, harms, or otherwise impedes in any manner the operation of the Product, or any other associated software, firmware, hardware, or computer system (such as local area or wide-area networks), including aesthetic disruptions or distortions, but does not include security keys or other such devices installed by Product manufacturer.

BID SUBMISSION

3. INTERNATIONAL BIDDING All offers (tenders), and all information and Product required by the solicitation or provided as explanation thereof, shall be submitted in English. All prices shall be expressed, and all payments shall be made, in United States Dollars ($US). Any offers (tenders) submitted which do not meet the above criteria will be rejected.

4. BID OPENING Bids may, as applicable, be opened publicly. The Commissioner reserves the right at any time to postpone or cancel a scheduled Bid opening.

5. BID SUBMISSION All Bids are to be packaged, sealed and submitted to the location stated in the Bid Specifications. Bidders are solely responsible for timely delivery of their Bids to the

(Continued)

location set forth in the Bid Specifications prior to the stated Bid opening date/time.

A Bid return envelope, if provided with the Bid Specifications, should be used with the Bid sealed inside. If the Bid response does not fit into the envelope, the Bid envelope should be attached to the outside of the sealed box or package with the Bid inside. If using a commercial delivery company that requires use of their shipping package or envelope, Bidder's sealed Bid, labeled as detailed below, should be placed within the shipper's sealed envelope to ensure that the Bid is not prematurely opened.

All Bids must have a label on the outside of the package or shipping container outlining the following information:

"**BID ENCLOSED** (bold print, all capitals)

- Group Number
- IFB or RFP Number
- Bid Submission date and time"

In the event that a Bidder fails to provide such information on the return Bid envelope or shipping material, the receiving entity reserves the right to open the shipping package or envelope to determine the proper Bid number or Group Number, and the date and time of Bid opening. Bidder shall have no claim against the receiving entity arising from such opening and such opening shall not affect the validity of the Bid or the procurement.

Bidder assumes all risk of late delivery associated with the Bid not being identified, packaged or labeled in accordance with the foregoing requirements.

All Bids must be signed by a person authorized to commit the Bidder to the terms of the Bid Documents and the content of the Bid (offer).

6. <u>LATE BIDS REJECTED</u> For purposes of Bid openings held and conducted by OGS, a Bid must be received in such place as may be designated in the Bid Documents or, if no place is specified, in the OGS Mailroom located in the Empire State Plaza, Albany, New York 12242, at or before the date and time established in the Bid Specifications for the Bid opening. For purposes of Bid openings held and conducted by Authorized Users other than OGS, the term late Bid is defined as a Bid not received in the location established in the Bid Specifications at or before the date and time specified for the Bid opening.

Any Bid received at the specified location after the time specified will be considered a late Bid. A late Bid shall not be considered for award unless: (i) no timely Bids meeting the requirements of the Bid Documents are received or, (ii) in the case of a multiple award, an insufficient number of timely Bids were received to satisfy the multiple award; and acceptance of the late Bid is in the best interests of the Authorized Users. Bids submitted for continuous or periodic recruitment contract awards must meet the submission requirements associated with their specifications. Delays in United States mail deliveries or any other means of transmittal, including couriers or agents of the Authorized User, shall not excuse late Bid submissions. Similar types of delays, including but not limited to, bad weather, or security procedures for parking and building admittance, shall not excuse late Bid submissions. Determinations relative to Bid timeliness shall be at the sole discretion of the Commissioner.

7. <u>BID CONTENTS</u> Bids must be complete and legible. All Bids must be signed. All information required by the Bid Specifications must be supplied by the Bidder on the forms or in the format specified. No alteration, erasure or addition is to be made to the Bid Documents. Changes may be ignored by the Commissioner or may be grounds for rejection of the Bid. Changes, corrections and/or use of white-out in the Bid or Bidder's response portion of the Bid Document must be initialed by an authorized representative of the Bidder. Bidders are cautioned to verify their Bids before submission, as amendments to Bids or requests for withdrawal of Bids received by the Commissioner after the time specified for the Bid opening may not be considered.

8. <u>EXTRANEOUS TERMS</u> Bids must conform to the terms set forth in the Bid Documents, as extraneous terms or material deviations (including additional, inconsistent, conflicting or alternative terms) may render the Bid non-responsive and may result in rejection of the Bid.

<u>Extraneous term(s) submitted on standard, pre-printed forms (including but not limited to: product literature, order forms, license agreements, contracts or other documents) that are attached or referenced with submissions shall not be considered part of the Bid or resulting Contract, but shall be deemed included for informational or promotional purposes only.</u>

Only those extraneous terms that meet all the following requirements may be considered as having been submitted as part of the Bid:

a. Each proposed extraneous term (addition, deletion, counter-offer, deviation, or modification) must be specifically enumerated in a writing which is not part of a pre-printed form; and

b. The writing must identify the particular specification requirement (if any) that Bidder rejects or proposes to modify by inclusion of the extraneous term; and

c. The Bidder shall enumerate the proposed addition, deletion, counter-offer, deviation, or modification from the Bid Document, and the reasons therefore.

No extraneous term(s), whether or not deemed "material," shall be incorporated into a Contract or Purchase Order unless submitted in accordance with the above and the Commissioner or Authorized User expressly accepts each such term(s) in writing. Acceptance and/or processing of the Bid shall not constitute such written acceptance of Extraneous Term(s).

9. <u>CONFIDENTIAL/TRADE SECRET MATERIALS</u>

a. CONTRACTOR Confidential, trade secret or proprietary materials as defined by the laws of the State of New York must be clearly marked and identified as such upon submission by the Bidder. Marking the Bid as "confidential" or "proprietary" on its face or in the document header or footer shall not be considered by the Commissioner or Authorized User to be sufficient without specific justification as to why disclosure of particular information in the Bid would cause substantial injury to the competitive position of the Bidder. Bidders/Contractors intending to seek an exemption from disclosure of these materials under the Freedom

(Continued)

of Information Law must request the exemption in writing, setting forth the reasons for the claimed exemption. The State's receipt/acceptance of the claimed materials does not constitute a determination on the exemption request, which determination will be made in accordance with statutory procedures. Properly identified information that has been designated confidential, trade secret, or proprietary by the Bidder will not be disclosed except as may be required by the Freedom of Information Law or other applicable State and federal laws.

b. COMMISSIONER OR AUTHORIZED USER Contractor warrants, covenants and represents that any confidential information obtained by Contractor, its agents, Subcontractors, officers, distributors, resellers or employees in the course of performing its obligations, including without limitation, security procedures, business operations information, or commercial proprietary information in the possession of the State or any Authorized User hereunder or received from another third party, will not be divulged to any third parties without the written consent of the Commissioner or Authorized User. Contractor shall not be required to keep confidential any such material that is publicly available through no fault of Contractor, independently developed by Contractor without reliance on confidential information of the Authorized User, or otherwise obtained under the Freedom of Information Law or other applicable New York State laws and regulations. This warranty shall survive termination of this Contract. Contractor further agrees to take commercially reasonable steps as to its agents, Subcontractors, officers, distributors, resellers or employees regarding the obligations arising under this clause to insure such confidentiality.

10. PREVAILING WAGE RATES - PUBLIC WORKS AND BUILDING SERVICES CONTRACTS If any portion of work being Bid is subject to the prevailing wage rate provisions of the Labor Law, the following shall apply:

a. PREVAILING WAGE RATE APPLICABLE TO BID SUBMISSIONS A copy of the applicable prevailing wage rates to be paid or provided are annexed to the Bid Documents. Bidders must submit Bids which are based upon the prevailing hourly wages, and supplements in cash or equivalent benefits (i.e., fringe benefits and any cash or non-cash compensation which are not wages, as defined by law) that equal or exceed the applicable prevailing wage rate(s) for the location where the work is to be performed. Bidders may not submit Bids based upon hourly wage rates and supplements below the applicable prevailing wage rates as established by the New York State Department of Labor. Bids that fail to comply with this requirement will be disqualified.

b. WAGE RATE PAYMENTS/CHANGES DURING CONTRACT TERM The wages to be paid under any resulting Contract shall not be less than the prevailing rate of wages and supplements as set forth by law. It is required that the Contractor keep informed of all changes in the prevailing wage rates during the Contract term that apply to the classes of individuals supplied by the Contractor on any projects resulting from this Contract, subject to the provisions of the Labor Law. Contractor is solely liable for and must pay such required prevailing wage adjustments during the Contract term as required by law.

c. ARTICLE 8 CONSTRUCTION/PUBLIC WORKS CONTRACTS In compliance with Article 8, Section 220 of the New York State Labor Law:

i. Posting The Contractor must publicly post on the work site, in a prominent and accessible place, a legible schedule of the prevailing wage rates and supplements.

ii. Payroll Records Contractors and Subcontractors must keep original payrolls or transcripts subscribed and affirmed as true under the penalties of perjury as required by law. For public works contracts over $25,000 where the Contractor maintains no regular place of business in New York State, such records must be kept at the work site. For building services contracts, such records must be kept at the work site while work is being performed.

iii. Submission of Certified Payroll Transcripts for Public Works Contracts Only Contractors and Subcontractors on public works projects must submit monthly payroll transcripts to the Authorized User that has prepared or directs the preparation of the plans and specifications for a public works project, as set forth in the Bid Specifications. For Mini-Bid solicitations, the payroll records must be submitted to the entity preparing the agency Mini-Bid project specification. For "agency specific" Bids, the payroll records should be submitted to the entity issuing the purchase order. For all other OGS Centralized Contracts, such records should be submitted to the individual agency issuing the purchase order(s) for the work. Upon mutual agreement of the Contractor and the Authorized User, the form of submission may be submitted in a specified disk format acceptable to the Department of Labor provided: 1) the Contractor/Subcontractor retains the original records; and, (2) an original signed letter by a duly authorized individual of the Contractor or Subcontractor attesting to the truth and accuracy of the records accompanies the disk. This provision does not apply to Article 9 of the Labor Law building services contracts.

iv. Day's Labor No laborers, workmen or mechanics in the employ of the Contractor, Subcontractor or other person doing or contracting to do all or part of the work contemplated by the Contract shall be permitted or required to work more than eight hours in any one calendar day or more than five calendar days in any one week except in cases of extraordinary emergency including fire, flood or danger to life or property. "Extraordinary emergency" shall be deemed to include situations in which sufficient laborers, workers and mechanics cannot be employed to carry on public work expeditiously as a result of such restrictions upon the number of hours and days of labor and the immediate commencement or prosecution or completion without undue delay of the public work is necessary in the judgment of the NYS Commissioner of Labor for the preservation of the Contract site or for the protection of the life and limb of the persons using the Contract site.

d. ARTICLE 9 BUILDING SERVICES CONTRACTS
In compliance with Article 9, Section 230 of the New York State Labor Law:

i. Payroll Records Contractors and Subcontractors must keep original payrolls or transcripts subscribed and affirmed as true under the penalties of perjury as required by law. Where the Contractor or Subcontractor maintains no regular place of business in New York State, such records must be kept at the work site while work is being performed.

(Continued)

ii. Overtime Employees of Contractors and Subcontractors who work in excess of eight hours in a day or forty hours in a week shall be paid at the overtime rate identified by the New York State Department of Labor.

11. TAXES

a. Unless otherwise specified in the Bid Specifications or Contract, the quoted Bid price includes all taxes applicable to the transaction.

b. Purchases made by the State of New York and certain non-State Authorized Users are exempt from New York State and local sales taxes and, with certain exceptions, federal excise taxes. To satisfy the requirements of the New York State Sales tax exemption, either the Purchase Order issued by a State Agency or the invoice forwarded to authorize payment for such purchases will be sufficient evidence that the sale by the Contractor was made to the State, an exempt organization under Section 1116 (a) (1) of the Tax Law. Non-State Authorized Users must offer their own proof of exemption upon request. No person, firm or corporation is, however, exempt from paying the State Truck Mileage and Unemployment Insurance or Federal Social Security taxes, which remain the sole responsibility of the Bidder/Contractor.

c. Purchases by Authorized Users other than the State of New York may be subject to certain taxes which were not included in the Bid price, and in those instances the tax should be computed based on the Contract price and added to the invoice submitted to such entity for payment.

12. EXPENSES PRIOR TO CONTRACT EXECUTION The Commissioner and any Authorized User(s) are not liable for any costs incurred by a Vendor, Bidder or Contractor in the preparation and production of a Bid, Mini-Bid, cost proposal revision, or for any work performed prior to Contract execution.

13. ADVERTISING RESULTS The prior written approval of the Commissioner is required in order for results of the Bid to be used by the Contractor as part of any commercial advertising. The Contractor shall also obtain the prior written approval of the Commissioner relative to the Bid or Contract for press or other media releases.

14. PRODUCT REFERENCES

a. "**Or Equal**" In all Bid Specifications the words "or equal" are understood to apply where a copyrighted, brand name, trade name, catalog reference, or patented Product is referenced. References to such specific Product are intended as descriptive, not restrictive, unless otherwise stated. Comparable Product will be considered if proof of compatibility is provided, including appropriate catalog excerpts, descriptive literature, specifications and test data, etc. The Commissioner's decision as to acceptance of the Product as equal shall be final.

b. Discrepancies in References In the event of a discrepancy between the model number referenced in the Bid Specifications and the written description of the Products which cannot be reconciled, with respect to such discrepancy, then the written description shall prevail.

15. REMANUFACTURED, RECYCLED, RECYCLABLE OR RECOVERED MATERIALS Upon the conditions specified in the Bid Specifications and in accordance with the laws of the State of New York, Contractors are encouraged to use recycled, recyclable or recovered materials in the manufacture of Products and packaging to the maximum extent practicable without jeopardizing the performance or intended end use of the Product or packaging unless such use is precluded due to health, welfare, safety requirements or in the Bid Specifications. Contractors are further encouraged to offer remanufactured Products to the maximum extent practicable without jeopardizing the performance or intended end use of the Product and unless such use is precluded due to health, welfare, safety requirements or by the Bid Specifications. Where such use is not practical, suitable, or permitted by the Bid Specifications, Contractor shall deliver new materials in accordance with the "Warranties" set forth below.

Items with recycled, recyclable, recovered, refurbished or remanufactured content must be identified in the Bid or Bidder will be deemed to be offering new Product.

16. PRODUCTS MANUFACTURED IN PUBLIC INSTITUTIONS Bids offering Products that are manufactured or produced in public institutions will be rejected.

17. PRICING

a. Unit Pricing If required by the Bid Specifications, the Bidder should insert the price per unit specified and the price extensions in decimals, not to exceed four places for each item unless otherwise specified, in the Bid. In the event of a discrepancy between the unit price and the extension, the unit price shall govern unless, in the sole judgment of the Commissioner, such unit pricing is obviously erroneous.

b. Net Pricing Unless otherwise required by the Bid Specifications, prices shall be net, including transportation, customs, tariff, delivery and other charges fully prepaid by the Contractor to the destination(s) indicated in the Bid Specifications, subject to the cash discount.

c. "No Charge" Bid When Bids are requested on a number of Products as a Group or Lot, a Bidder desiring to Bid "no charge" on a Product in the Group or Lot must clearly indicate such. Otherwise, such Bid may be considered incomplete and be rejected, in whole or in part, at the discretion of the Commissioner.

d. Educational Pricing All Products to be supplied for educational purposes that are subject to educational discounts shall be identified in the Bid and such discounts shall be made available to qualifying institutions.

e. Third Party Financing If Product acquisitions are financed through any third party financing, Contractor may be required as a condition of Contract Award to agree to the terms and conditions of a "Consent & Acknowledgment Agreement" in a form acceptable to the Commissioner.

f. Best Pricing Offer During the Contract term, if substantially the same or a smaller quantity of a Product is sold by the Contractor outside of this Contract upon the same or similar terms and conditions as that of this Contract at a lower price to a federal, state or local governmental entity, the price under this Contract, at the discretion of the Commissioner, shall be immediately reduced to the lower price.

(Continued)

g. Specific price decreases:

(i) GSA Changes: Where NYS Net Prices are based on an approved GSA Schedule, price decreases shall take effect automatically during the Contract term and apply to Purchase Orders submitted on or after the date the approved GSA Schedule pricing decreases during the Contract term; or

(ii) Commercial Price List Reductions: Where NYS Net Prices are based on a discount from Contractor's list prices, price decreases shall take effect automatically during the Contract term and apply to Purchase Orders submitted on or after the date Contractor lowers its pricing to its customers generally or to similarly situated government customers during the Contract term; or

(iii) Special Offers/Promotions Generally: Where Contractor generally offers more advantageous special price promotions or special discount pricing to other customers during the Contract term for a similar quantity, and the maximum price or discount associated with such offer or promotion is better than the discount or Net Price otherwise available under this Contract, such better price or discount shall apply for similar quantity transactions under this Contract for the life of such general offer or promotion; and

(iv) Special Offers/Promotions to Authorized Users: Contractor may offer Authorized Users, under either this Contract or any other Contracting vehicle, competitive pricing which is lower than the NYS Net Price set forth herein at any time during the Contract term and such lower pricing shall not be applied as a global price reduction under the Contract pursuant to the foregoing paragraph (iii).

Unless otherwise specified in the Bid Specifications, Contractor may offer lower prices or better terms (see Modification of Contract Terms) on any specific Purchase Order(s) from any Authorized User without being in conflict with, or having any obligation to comply on a global basis with, the terms of this clause.

h. Cost Proposal Revisions A Contractor may be solicited prior to contract award to propose the best possible offer for the Product or service being bid on, in accordance with State Finance Law § 163(9)(c). A cost proposal revision must be a lower price than the initial price.

18. DRAWINGS

a. Drawings Submitted With Bid When the Bid Specifications require the Bidder to furnish drawings and/or plans, such drawings and/or plans shall conform to the mandates of the Bid Documents and shall, when approved by the Commissioner, be considered a part of the Bid and of any resulting Contract. All symbols and other representations appearing on the drawings shall be considered a part of the drawing.

b. Drawings Submitted During the Contract Term Where required to develop, maintain and deliver diagrams or other technical schematics regarding the scope of work, Contractor shall do so on an ongoing basis at no additional charge, and must, as a condition of payment, update drawings and plans during the Contract term to reflect additions, alterations, and deletions. Such drawings and diagrams shall be delivered to the Authorized User's representative.

c. Accuracy of Drawings Submitted All drawings shall be neat and professional in manner and shall be clearly labeled as to locations and type of Product, connections and components. Drawings and diagrams are to be in compliance with accepted drafting standards. Acceptance or approval of such plans shall not relieve the Contractor from responsibility for design or other errors of any sort in the drawings or plans, or from its responsibility for performing as required, furnishing Product, services or installation, or carrying out any other requirements of the intended scope of work.

19. SITE INSPECTION Where a site inspection is required by the Bid Specifications or Project Definition, Bidder shall be required to inspect the site, including environmental or other conditions for pre-existing deficiencies that may affect the installed Product, equipment, or environment or services to be provided and, which may affect Bidder's ability to properly deliver, install or otherwise provide the required Product. All inquiries regarding such conditions shall be made in writing. Bidder shall be deemed to have knowledge of any deficiencies or conditions which such inspection or inquiry might have disclosed. Bidder must provide a detailed explanation with its Bid if additional work is required under this clause in order to properly complete the delivery and installation of the required Product or provide the requested service.

20. PROCUREMENT CARD The State has entered into an agreement for purchasing card services. The Purchasing Card enables Authorized Users to make authorized purchases directly from a Contractor without processing Purchase Orders or Purchase Authorizations. Purchasing Cards are issued to selected employees authorized to purchase for the Authorized User and having direct contact with Contractors. Cardholders can make purchases directly from any Contractor that accepts the Purchasing Card.

The Contractor shall not process a transaction for payment through the credit card clearinghouse until the purchased Products have been shipped or services performed. Unless the cardholder requests correction or replacement of a defective or faulty Product in accordance with other Contract requirements, the Contractor shall immediately credit a cardholder's account for Products returned as defective or faulty.

21. SAMPLES

a. Standard Samples Bid Specifications may indicate that the Product to be purchased must be equal to a standard sample on display in a place designated by the Commissioner and such sample will be made available to the Bidder for examination prior to the opening date. Failure by the Bidder to examine such sample shall not entitle the Bidder to any relief from the conditions imposed by the Bid Specifications.

b. Bidder Supplied Samples The Commissioner reserves the right to request from the Bidder/Contractor a representative sample(s) of the Product offered at any time prior to or after award of a contract. Unless otherwise instructed, samples shall be furnished within the time specified in the request. Untimely submission of a sample may constitute grounds for rejection of the Bid or cancellation of the Contract. Samples must be submitted free of charge and be accompanied by the Bidder's name and address, any descriptive literature relating to the Product and a

(Continued)

statement indicating how and where the sample is to be returned. Where applicable, samples must be properly labeled with the appropriate Bid or Contract reference.

A sample may be held by the Commissioner during the entire term of the Contract and for a reasonable period thereafter for comparison with deliveries. At the conclusion of the holding period, the sample, where feasible, will be returned as instructed by the Bidder, at the Bidder's expense and risk. Where the Bidder has failed to fully instruct the Commissioner as to the return of the sample (i.e., mode and place of return, etc.) or refuses to bear the cost of its return, the sample shall become the sole property of the receiving entity at the conclusion of the holding period.

c. Enhanced Samples When an approved sample exceeds the minimum specifications, all Product delivered must be of the same enhanced quality and identity as the sample. Thereafter, in the event of a Contractor's default, the Commissioner may procure a Product substantially equal to the enhanced sample from other sources, charging the Contractor for any additional costs incurred.

d. Conformance with Samples Submission of a sample (whether or not such sample is tested by, or for, the Commissioner) and approval thereof shall not relieve the Contractor from full compliance with all terms and conditions, performance related and otherwise, specified in the Bid Specifications. If in the judgment of the Commissioner the sample or Product submitted is not in accordance with the specifications or testing requirements prescribed in the Bid Specifications, the Commissioner may reject the Bid. If an award has been made, the Commissioner may cancel the Contract at the expense of the Contractor.

e. Testing All samples are subject to tests in the manner and place designated by the Commissioner, either prior to or after Contract award. Unless otherwise stated in the Bid Specifications, Bidder samples consumed or rendered useless by testing will not be returned to the Bidder. Testing costs for samples that fail to meet Contract requirements may be at the expense of the Contractor.

f. Requests For Samples By Authorized Users Requests for samples by Authorized Users require the consent of the Contractor. Where Contractor refuses to furnish a sample, Authorized User may, in its sole discretion, make a determination on the performance capability of the Product or on the issue in question.

BID EVALUATION

22. BID EVALUATION The Commissioner reserves the right to accept or reject any and all Bids, or separable portions of Bids, and waive technicalities, irregularities, and omissions if the Commissioner determines the best interests of the State will be served. The Commissioner, in his/her sole discretion, may accept or reject illegible, incomplete or vague Bids and his/her decision shall be final. A conditional or revocable Bid which clearly communicates the terms or limitations of acceptance may be considered, and Contract award may be made in compliance with the Bidder's conditional or revocable terms in the Bid.

23. TIE BIDS In the event two Bids are found to be substantially equivalent, price shall be the basis for determining the award recipient. While prompt payment discounts will not be considered in determining the low Bid, the Commissioner may consider any prompt payment discount in resolving Bids which are otherwise tied. If two or more Bidders submit substantially equivalent Bids as to pricing or other factors, the decision of the Commissioner to award a Contract to one or more of such Bidders shall be final.

24. QUANTITY CHANGES PRIOR TO AWARD The Commissioner reserves the right, at any time prior to the award of a specific quantity Contract, to alter in good faith the quantities listed in the Bid Specifications. In the event such right is exercised, the lowest responsible Bidder meeting Bid Specifications will be advised of the revised quantities and afforded an opportunity to extend or reduce its Bid price in relation to the changed quantities. Refusal by the low Bidder to so extend or reduce its Bid price may result in the rejection of its Bid and the award of such Contract to the lowest responsible Bidder who accepts the revised qualifications.

25. TIMEFRAME FOR OFFERS The Commissioner reserves the right to make awards within sixty days after the date of the Bid opening or such other period of time as set forth in the Bid Documents, during which period, Bids must remain firm and cannot be withdrawn. Where an award is not made within the sixty day period or other time specified as set forth in the Bid Documents, the Bids shall remain firm until such later time as either a Contract is awarded or the Bidder delivers to the Commissioner written notice of the withdrawal of its Bid.

TERMS & CONDITIONS

26. CONTRACT CREATION / EXECUTION Except for contracts governed by Article 11-B of the State Finance Law, subject to and upon receipt of all required approvals as set forth in the Bid Specifications, a Contract shall be deemed executed and created with the successful Bidder(s) upon the Commissioner's mailing or electronic communication to the address on the Bid/Contract of: (i) the final Contract Award Notice; (ii) a fully executed Contract; or (iii) a Purchase Order authorized by the Commissioner.

27. PARTICIPATION IN CENTRALIZED CONTRACTS

a. Agencies All State Agencies may utilize and purchase under any Centralized Contract let by the Commissioner, unless the Bid Documents limit purchases to specific State Agencies.

b. Non-State Agency Authorized Users Authorized Users other than State Agencies are permitted to make purchases through Centralized Contracts where permitted by law, the Contract or the Commissioner.

c. Voluntary Extension Purchase Orders issued against a Centralized Contract by any Authorized User not provided for in the Bid Specifications shall be honored by the Contractor at its discretion and only with the approval of the OGS Commissioner and any other approvals required by law. Contractors are encouraged to voluntarily extend service Contracts to those additional entities authorized to utilize commodity Contracts under Section 163(3)(a)(iv) of the State Finance Law.

d. Responsibility for Performance Participation in Centralized Contracts by Authorized Users is permitted upon the following conditions: (i) the responsibility with regard to performance of any contractual obligation, covenant, condition or term thereunder by any Authorized User other than State Agencies

(Continued)

shall be borne and is expressly assumed by such Authorized User and not by the State; (ii) a breach of the Contract by any particular Authorized User shall neither constitute nor be deemed a breach of the Contract as a whole which shall remain in full force and effect, and shall not affect the validity of the Contract nor the obligations of the Contractor thereunder respecting non-breaching Authorized Users, whether State or otherwise; (iii) for a breach by an Authorized User other than a State Agency, the State specifically and expressly disclaims any and all liability for such breach; and (iv) each non-State Agency Authorized User and Contractor guarantees to save the State, its officers, agents and employees harmless from any liability that may be or is imposed by the non-State Agency Authorized User's or Contractor's failure to perform in accordance with its obligations under the Contract.

e. Contract Migration Authorized Users holding individual Contracts with a Contractor at the time that Contractor is awarded a Centralized Contract for the same Products or services shall be permitted to migrate to that Centralized Contract effective with its commencement date. Such migration shall not operate to diminish, alter or eliminate any right that the Authorized User otherwise had under the terms and conditions of their individual Contract.

28. MODIFICATION OF CONTRACT TERMS The terms and conditions set forth in the Contract shall govern all transactions by Authorized User(s) under this Contract. The Contract may only be modified or amended upon mutual written agreement of the Commissioner and Contractor.

The Contractor may, however, offer Authorized User(s) more advantageous pricing, payment, or other terms and conditions than those set forth in the Contract. In such event, a copy of such terms shall be furnished to the Authorized User(s) and Commissioner by the Contractor at the time of such offer.

Other than where such terms are more advantageous for the Authorized User(s) than those set forth in the Contract, no alteration or modification of the terms of the Contract, including substitution of Product, shall be valid or binding against Authorized User(s) unless authorized by the Commissioner or specified in the Contract Award Notification. No such alteration or modification shall be made by unilaterally affixing such terms to Product upon delivery (including, but not limited to, attachment or inclusion of standard pre-printed order forms, product literature, "shrink wrap" terms accompanying software upon delivery, or other documents) or by incorporating such terms onto order forms, purchase orders or other documents forwarded by the Contractor for payment, notwithstanding Authorized User's subsequent acceptance of Product, or that Authorized User has subsequently processed such document for approval or payment.

29. SCOPE CHANGES The Commissioner reserves the right to require, by written order, changes to the scope of the Contract, by altering, adding to or deducting from the Bid Specifications, such changes to be within the general scope of the Contract. If any such change causes an increase or decrease in the cost of, or the time required for, performance of any part of the work under the Contract, whether or not changed by the order, the Commissioner shall, upon notice from Contractor as hereafter stated, make an equitable adjustment in the Contract price, the delivery schedule or both and shall modify the Contract. The Contractor must assert its right to an adjustment under this clause within thirty days from the date of receipt of the written order. However, if the Commissioner decides that the facts justify it, the Commissioner may provide an adjustment without receipt of a proposal. Failure to agree to any adjustment shall be a dispute under the Disputes clause, provided, however, that nothing in this clause shall excuse the Contractor from proceeding with the Contract as changed.

30. ESTIMATED / SPECIFIC QUANTITY CONTRACTS Estimated quantity contracts, also referred to as indefinite delivery / indefinite quantity contracts, are expressly agreed and understood to be made for only the quantities, if any, actually ordered during the Contract term. No guarantee of any quantity is implied or given.

With respect to any specific quantity stated in the contract, the Commissioner reserves the right after award to order up to 20% more or less (rounded to the next highest whole number) than the specific quantities called for in the Contract. Notwithstanding the foregoing, the Commissioner may purchase greater or lesser percentages of Contract quantities should the Commissioner and Contractor so agree. Such agreement may include an equitable price adjustment.

31. EMERGENCY CONTRACTS In the event that a disaster emergency is declared by Executive Order under Section 28 of Article 2-B of the Executive Law, or the Commissioner determines pursuant to his/her authority under Section 163(10)(b) of the State Finance Law that an emergency exists requiring the prompt and immediate delivery of Product, the Commissioner reserves the right to obtain such Product from any source, including but not limited to this Contract(s), as the Commissioner in his/her sole discretion determines will meet the needs of such emergency. Contractor shall not be entitled to any claim or lost profits for Product procured from other sources pursuant to this clause. The reasons underlying the finding that an emergency exists shall be included in the procurement record.

32. PURCHASE ORDERS Unless otherwise authorized in writing by the Commissioner, no Product is to be delivered or furnished by Contractor until transmittal of an official Purchase Order from the Authorized User. Unless terminated or cancelled pursuant to the authority vested in the Commissioner, Purchase Orders shall be effective and binding upon the Contractor when placed in the mail or electronically transmitted prior to the termination of the Contract period, addressed to the Contractor at the address for receipt of orders set forth in the Contract or in the Contract Award Notification.

All Purchase Orders issued pursuant to Contracts let by the Commissioner must bear the appropriate Contract number and, if necessary, required State approvals. As deemed necessary, the Authorized User may confirm pricing and other Product information with the Contractor prior to placement of the Purchase Order. The State reserves the right to require any other information from the Contractor which the State deems necessary in order to complete any Purchase Order placed under the Contract. Unless otherwise specified, all Purchase Orders against Centralized Contracts will be placed by Authorized Users directly with the Contractor and any discrepancy between the terms stated on the Contractor's order form, confirmation or acknowledgment, and the Contract terms shall be resolved in favor of the terms most favorable to the Authorized User. Should an Authorized User add written terms and conditions to the Purchase Order that conflict

(Continued)

with the terms and conditions of the Contract, the Contractor has the option of rejecting the Purchase Order within five business days of its receipt but shall first attempt to negotiate the additional written terms and conditions in good faith with the Authorized User, or fulfill the Purchase Order. Notwithstanding the above, the Authorized User reserves the right to dispute any discrepancies arising from the presentation of additional terms and conditions with the Contractor.

If, with respect to an Agency Specific Contract let by the Commissioner, a Purchase Order is not received by the Contractor within two weeks after the issuance of a Contract Award Notification, it is the responsibility of the Contractor to request in writing that the appropriate Authorized User forward a Purchase Order. If, thereafter, a Purchase Order is not received within a reasonable period of time, the Contractor shall promptly notify in writing the appropriate purchasing officer in OGS. Failure to timely notify such officer may, in the discretion of the OGS Commissioner and without cost to the State, result in the cancellation of such requirement by the OGS Commissioner with a corresponding reduction in the Contract quantity and price.

33. PRODUCT DELIVERY Delivery must be made as ordered to the address specified on the Purchase Order and in accordance with the terms of the Contract. Delivery shall be made within thirty calendar days after receipt of a Purchase Order by the Contractor, unless otherwise agreed to by the Authorized User and the Contractor. The decision of the Commissioner as to compliance with delivery terms shall be final. The burden of proof for delay in receipt of a Purchase Order shall rest with the Contractor. In all instances of a potential or actual delay in delivery, the Contractor shall immediately notify the Commissioner and the Authorized User, and confirm in writing the explanation of the delay, and take appropriate action to avoid any subsequent late deliveries. Any extension of time for delivery must be requested in writing by the Contractor and approved in writing by the Authorized User. Failure to meet such delivery time schedule may be grounds for cancellation of the order or, in the Commissioner's discretion, the Contract.

34. WEEKEND AND HOLIDAY DELIVERIES Unless otherwise specified in the Bid Specifications or by an Authorized User, deliveries will be scheduled for ordinary business hours, Monday through Friday (excluding legal holidays observed by the State of New York). Deliveries may be scheduled by mutual agreement for Saturdays, Sundays or legal holidays observed by the State of New York where the Product is for daily consumption, an emergency exists, the delivery is a replacement, delivery is late, or other reasonable circumstance in which event the convenience of the Authorized User shall govern.

35. SHIPPING/RECEIPT OF PRODUCT

a. Packaging Product shall be securely and properly packed for shipment, storage and stocking in appropriate, clearly labeled shipping containers and according to accepted commercial practice, without any extra charges for packing materials, cases or other types of containers. The container shall become and remain the property of the Authorized User unless otherwise specified in the Contract documents.

b. Shipping Charges Unless otherwise stated in the Bid Specifications, all deliveries shall be deemed to be freight on board (F.O.B.) destination tailgate delivery at the dock of the Authorized User. Unless otherwise agreed, items purchased at a price F.O.B. Shipping point plus transportation charges shall not relieve the Contractor from responsibility for safe and proper delivery notwithstanding the Authorized User's payment of transportation charges. Contractor shall be responsible for ensuring that the Bill of Lading states "charges prepaid" for all shipments.

c. Receipt of Product The Contractor shall be solely responsible for assuring that deliveries are made to personnel authorized to accept delivery on behalf of the Authorized User. Any losses resulting from the Contractor's failure to deliver Product to authorized personnel shall be borne exclusively by the Contractor.

36. TITLE AND RISK OF LOSS Notwithstanding the form of shipment, title or other property interest, risk of loss shall not pass from the Contractor to the Authorized User until the Products have been received, inspected and accepted by the receiving entity. Acceptance shall occur within a reasonable time or in accordance with such other defined acceptance period as may be specified in the Bid Specifications or Purchase Order. Mere acknowledgment by Authorized User personnel of the delivery or receipt of goods (e.g., signed bill of lading) shall not be deemed or construed as acceptance of the Products received. Any delivery of Product that is substandard or does not comply with the Bid Specifications or Contract terms and conditions, may be rejected or accepted on an adjusted price basis, as determined by the Commissioner.

37. RE-WEIGHING PRODUCT Deliveries are subject to re-weighing at the point of destination by the Authorized User. If shrinkage occurs which exceeds that normally allowable in the trade, the Authorized User shall have the option to require delivery of the difference in quantity or to reduce the payment accordingly. Such option shall be exercised in writing by the Authorized User.

38. PRODUCT SUBSTITUTION In the event a specified manufacturer's Product listed in the Contract becomes unavailable or cannot be supplied by the Contractor for any reason (except as provided for in the Savings/Force Majeure Clause), a Product deemed in writing by the Commissioner to be equal to or better than the specified Product must be substituted by the Contractor at no additional cost or expense to the Authorized User. Unless otherwise specified, any substitution of Product prior to the Commissioner's written approval may be cause for termination of Contract.

39. REJECTED PRODUCT When Product is rejected, it must be removed by the Contractor from the premises of the Authorized User within ten calendar days of notification of rejection by the Authorized User. Upon notification of rejection, risk of loss of rejected or non-conforming Product shall remain with Contractor. Rejected items not removed by the Contractor within ten calendar days of notification shall be regarded as abandoned by the Contractor, and the Authorized User shall have the right to dispose of Product as its own property. The Contractor shall promptly reimburse the Authorized User for any and all costs and expenses incurred in storage or effecting removal or disposition after the ten-calendar-day period.

40. INSTALLATION Where installation is required, Contractor shall be responsible for placing and installing the Product in the required locations. All materials used in the installation shall be of good quality and shall be free from any and

(Continued)

all defects that would mar the Product or render it unsound. Installation includes the furnishing of any equipment, rigging and materials required to install or place the Product in the proper location. The Contractor shall protect the site from damage for all its work and shall repair damages or injury of any kind caused by the Contractor, its employees, officers or agents. If any alteration, dismantling or excavation, etc. is required to effect installation, the Contractor shall thereafter promptly restore the structure or site. Work shall be performed to cause the least inconvenience to the Authorized User(s) and with proper consideration for the rights of other Contractors or workers. The Contractor shall promptly perform its work and shall coordinate its activities with those of other Contractors. The Contractor shall clean up and remove all debris and rubbish from its work as required or directed. Upon completion of the work, the building and surrounding area of work shall be left clean and in a neat, unobstructed condition, and everything in satisfactory repair and order.

41. REPAIRED OR REPLACED PARTS / COMPONENTS Where the Contractor is required to repair, replace or substitute Product or parts or components of the Product under the Contract, the repaired, replaced or substituted Products shall be subject to all terms and conditions for new parts and components set forth in the Contract including Warranties, as set forth in the Warranties Clause herein. Replaced or repaired Product or parts and components of such Product shall be new and shall, if available, be replaced by the original manufacturer's component or part. Remanufactured parts or components meeting new Product standards may be permitted by the Commissioner or Authorized User. Before installation, all proposed substitutes for the original manufacturers installed parts or components must be approved by the Authorized User. The part or component shall be equal to or of better quality than the original part or component being replaced.

42. EMPLOYEES, SUBCONTRACTORS & AGENTS All employees, Subcontractors or agents performing work under the Contract must be trained staff or technicians who meet or exceed the professional, technical and training qualifications set forth in the Bid Specifications or the Bid Documents, whichever is more restrictive, and must comply with all security and administrative requirements of the Authorized User. The Commissioner reserves the right to conduct a security background check or otherwise approve any employee, Subcontractor or agent furnished by Contractor and to refuse access to or require replacement of any personnel for cause based on professional, technical or training qualifications, quality of work or change in security status or non-compliance with Authorized User's security or other requirements. Such approval shall not relieve the Contractor of the obligation to perform all work in compliance with the Contract terms. The Commissioner reserves the right to reject and/or bar from any facility for cause any employee, Subcontractor, or agents of the Contractor.

43. ASSIGNMENT The Contractor shall not assign, transfer, convey, sublet, or otherwise dispose of the contract or its right, title or interest therein, or its power to execute such contract to any other person, company, firm or corporation in performance of the contract without the prior written consent of the Commissioner or Authorized User (as applicable); provided, however, notwithstanding anything in Section 138 of the State Finance Law to the contrary, any approval required thereunder shall not be unreasonably withheld, conditioned, delayed or denied. Notwithstanding the foregoing, the State shall not hinder, prevent or affect assignment of money by a Contractor for the benefit of its creditors. Prior to a consent to assignment of monies becoming effective, the Contractor shall file a written notice of such monies assignment(s) with the Comptroller. Prior to a consent to assignment of a Contract, or portion thereof, becoming effective, the Contractor shall submit the request for assignment to the Commissioner and seek written agreement from the Commissioner which will be filed with the Comptroller. Commissioner shall use reasonable efforts to promptly respond to any request by Contractor for an assignment, provided that Contractor supplies sufficient information about the party to whom the Contractor proposes to assign the contract.

Upon notice to the Contractor, the Contract may be assigned without the consent of the Contractor to another State Agency or subdivision of the State pursuant to a governmental reorganization or assignment of functions under which the functions are transferred to a successor Agency or to another Agency that assumes OGS responsibilities for the Contract.

44. SUBCONTRACTORS AND SUPPLIERS The Commissioner reserves the right to reject any proposed Subcontractor or supplier for bona fide business reasons, including, but not limited to: the company failed to solicit New York State certified minority- and women-owned business enterprises as required in prior OGS Contracts; the fact that such Subcontractor or supplier is on the New York State Department of Labor's list of companies with which New York State cannot do business; the Commissioner's determination that the company is not qualified or is not responsible; or the fact that the company has previously provided unsatisfactory work or services.

45. PERFORMANCE / BID BOND The Commissioner reserves the right to require a Bidder or Contractor to furnish, without additional cost, a performance, payment or Bid bond, negotiable irrevocable letter of credit, or other form of security for the faithful performance of the Contract. Where required, such bond or other security shall be in the form prescribed by the Commissioner.

46. SUSPENSION OF WORK The Commissioner, in his/her sole discretion, reserves the right to suspend any or all activities under this Contract, at any time, in the best interests of the Authorized User. In the event of such suspension, the Contractor will be given a formal written notice outlining the particulars of such suspension. Examples of the reason for such suspension include, but are not limited to, a budget freeze or reduction in State spending, declaration of emergency, contract compliance issues or other circumstances. Upon issuance of such notice, the Contractor is not to accept any Purchase Orders, and shall comply with the suspension order. Activity may resume at such time as the Commissioner issues a formal written notice authorizing a resumption of performance under the Contract.

An Authorized User may issue a formal written notice for the suspension of work for which it has engaged the Contractor for reasons specified in the above paragraph. The written notice shall set forth the reason for such suspension and a copy of the written notice shall be provided to the Commissioner.

47. TERMINATION

a. For Cause: For a material breach that remains uncured for more than thirty calendar days or other specified period after written notice to the Contractor, the Contract or Purchase Order may be

(Continued)

terminated by the Commissioner or Authorized User respectively, at the Contractor's expense where Contractor becomes unable or incapable of performing, or meeting any requirements or qualifications set forth in the Contract, or for non-performance, or upon a determination that Contractor is non-responsible. Such termination shall be upon written notice to the Contractor. In such event, the Commissioner or Authorized User may complete the contractual requirements in any manner it may deem advisable and pursue available legal or equitable remedies for breach.

b. For Convenience: By written notice, this Contract may be terminated at any time by the Commissioner for convenience upon sixty calendar days written notice or other specified period without penalty or other early termination charges due. Such termination of the Contract shall not affect any project or Purchase Order that has been issued under the Contract prior to the date of such termination. If the Contract is terminated pursuant to this subdivision, the Authorized User shall remain liable for all accrued but unpaid charges incurred through the date of the termination. Contractor shall use due diligence and provide any outstanding deliverables.

c. For Violation of Sections 139-j and 139-k of the State Finance Law: The Commissioner reserves the right to terminate the Contract in the event it is found that the certification filed by the Bidder in accordance with Section 139-k of the State Finance Law was intentionally false or intentionally incomplete. Upon such finding, the Commissioner may exercise his/her termination right by providing written notification to the Contractor in accordance with the written notification terms of the Contract.

d. For Violation of Section 5-a of the New York State Tax Law: The Commissioner reserves the right to terminate the contract in the event it is found that the certification filed by the Contractor in accordance with Section 5-a of the Tax Law is not timely filed during the term of the Contract or the certification furnished was intentionally false or intentionally incomplete. Upon such finding, the Commissioner may exercise his/her termination right by providing written notification to the Contractor in accordance with the written notification terms of the Contract.

e. For Non-Responsibility: The Bidder agrees that if it is found by the State that the Bidder's responses to the Vendor Responsibility Questionnaire were intentionally false or intentionally incomplete, on such finding, the Commissioner may terminate the Contract.

Upon written notice to the Contractor, and a reasonable opportunity to be heard with appropriate OGS officials or staff, the Contract may be terminated by the Commissioner or his or her designee at the Contractor's expense where the Contractor is determined by the Commissioner or his or her designee to be non-responsible. In such event, the Commissioner or his or her designee may complete the contractual requirements in any manner he or she may deem advisable and pursue available legal or equitable remedies for breach.

In no case shall such termination of the Contract by the State be deemed a breach thereof, nor shall the State be liable for any damages for lost profits or otherwise, which may be sustained by the Contractor as a result of such termination.

f. For refusal to testify, sign a waiver of immunity or answer questions
The Commissioner reserves the right in accordance with State Finance Law §139-a, to terminate the contract in the event it is found that a member, partner, director or officer of Contractor refused, when called before a grand jury, head of a state department, temporary state commission or other state agency, or the organized crime task force in the department of law, which is empowered to compel the attendance of witnesses and examine them under oath, to testify in an investigation, concerning any transaction or contract had with the state, any political subdivision thereof, a public authority or with any public department, agency or official of the state or of any political subdivision thereof or of a public authority, to sign a waiver of immunity against subsequent criminal prosecution or to answer any relevant question concerning such transaction or contract. Upon such finding, the Commissioner may exercise his/her termination right by providing written notification to the Contractor.

48. <u>SAVINGS/FORCE MAJEURE</u> A Force Majeure occurrence is an event or effect that cannot be reasonably anticipated or controlled and is not due to the negligence or willful misconduct of the affected party. Force Majeure includes, but is not limited to, acts of God, acts of war, acts of public enemies, terrorism, strikes, fires, explosions, actions of the elements, floods, or other similar causes beyond the control of the Contractor or the Commissioner in the performance of the Contract where non-performance, by exercise of reasonable diligence, cannot be prevented.

The affected party shall provide the other party with written notice of any Force Majeure occurrence as soon as the delay is known and provide the other party with a written contingency plan to address the Force Majeure occurrence, including, but not limited to, specificity on quantities of materials, tooling, people, and other resources that will need to be redirected to another facility and the process of redirecting them. Furthermore, the affected party shall use its commercially reasonable efforts to resume proper performance within an appropriate period of time. Notwithstanding the foregoing, if the Force Majeure condition continues beyond thirty (30) days, the Parties shall jointly decide on an appropriate course of action that will permit fulfillment of the Parties' objectives hereunder.

The Contractor agrees that in the event of a delay or failure of performance by the Contractor, under the Contract due to a Force Majeure occurrence:

a. The Commissioner may purchase from other sources (without recourse to and by the Contractor for the costs and expenses thereof) to replace all or part of the Products which are the subject of the delay, which purchases may be deducted from the Contract quantities without penalty or liability to the State, or
b. The Contractor will provide Authorized Users with access to Products first in order to fulfill orders placed before the Force Majeure event occurred. The Commissioner agrees that Authorized Users shall accept allocated performance or deliveries during the occurrence of the Force Majeure event.

Neither the Contractor nor the Commissioner shall be liable to the other for any delay in or failure of performance under the Contract due to a Force Majeure occurrence. Any such delay in or failure of performance shall not constitute default or give rise to any

(Continued)

liability for damages. The existence of such causes of such delay or failure shall extend the period for performance to such extent as determined by the Contractor and the Commissioner to be necessary to enable complete performance by the Contractor if reasonable diligence is exercised after the cause of delay or failure has been removed.

Notwithstanding the above, at the discretion of the Commissioner where the delay or failure will significantly impair the value of the Contract to the State or to Authorized Users, the Commissioner may terminate the Contract or the portion thereof which is subject to delays, and thereby discharge any unexecuted portion of the Contract or the relative part thereof.

In addition, the Commissioner reserves the right, in his/her sole discretion, to make an equitable adjustment in the Contract terms and/or pricing should extreme and unforeseen volatility in the marketplace affect pricing or the availability of supply. "Extreme and unforeseen volatility in the marketplace" is defined as market circumstances which meet the following criteria: (i) the volatility is due to causes outside the control of Contractor; (ii) the volatility affects the marketplace or industry, not just the particular Contract source of supply; (iii) the effect on pricing or availability of supply is substantial; and (iv) the volatility so affects Contractor's performance that continued performance of the Contract would result in a substantial loss. Failure of the Contractor to agree to any adjustment shall be a dispute under the Disputes clause; provided however, that nothing in this clause shall excuse the Contractor from performing in accordance with the Contract as changed.

49. <u>CONTRACT INVOICING</u>

a. **Invoicing.** Contractor and the dealers/distributors/resellers designated by the Contractor, if any, shall provide complete and accurate billing invoices to each Authorized User in order to receive payment. Billing invoices submitted to an Authorized User must contain all information required by the Contract and the State Comptroller or other appropriate fiscal officer. Submission of an invoice and payment thereof shall not preclude the Commissioner from requesting reimbursement or demanding a price adjustment in any case where the Product delivered is found to deviate from the terms and conditions of the Contract or where the billing was inaccurate.

Contractor shall provide, upon request of the Commissioner, any and all information necessary to verify the accuracy of the billings. Such information shall be provided in a commercially reasonable manner as requested by the Commissioner. The Commissioner may direct the Contractor to provide the information to the State Comptroller or to any Authorized User of the Contract.

b. Payment of Contract Purchases made by an Authorized User when the State Comptroller is responsible for issuing such payment The Authorized User and Contractor agree that payments for invoices submitted by the Contractor shall only be rendered electronically unless payment by paper check is expressly authorized by the Commissioner, in the Commissioner's sole discretion, due to extenuating circumstances. Such electronic payments shall be made in accordance with ordinary State procedures and practices. The Contractor shall comply with the State Comptroller's procedures to authorize electronic payments. Authorization forms are available at the State Comptroller website at www.osc.state.ny.us, by e-mail at HelpDesk@sfs.ny.gov, or by telephone at (518) 457-7737 or toll free (877) 737-4185. Contractor acknowledges that it will not receive payment on any invoices submitted under this Contract that are payable by the State Comptroller if it does not comply with the State Comptroller's electronic payment procedures, except where the Commissioner has expressly authorized payment by paper check as set forth above.

c. Payment of Contract Purchases made by an Authorized User when the State Comptroller is not responsible for issuing such payment The Authorized User and Contractor agree that payments for such Contract purchases shall be billed directly by Contractor on invoices/vouchers, together with complete and accurate supporting documentation as required by the Authorized User. Such payments shall be as mandated by the appropriate governing law from the receipt of a proper invoice. Such Authorized User and Contractor are strongly encouraged to establish electronic payments.

50. <u>DEFAULT – AUTHORIZED USER</u>

a. Breach by Authorized User. An Authorized User's breach shall not be deemed a breach of the Centralized Contract; rather, it shall be deemed a breach of the Authorized User's performance under the terms and conditions of the Centralized Contract.

b. Failure to Make Payment. In the event a participating Authorized User fails to make payment to the Contractor for Products delivered, accepted and properly invoiced, within thirty calendar days of such delivery and acceptance, the Contractor may, upon five business days advance written notice to both the Commissioner and the Authorized User's purchasing official, suspend additional shipments of Product or provision of services to such entity until such time as reasonable arrangements have been made and assurances given by such entity for current and future Contract payments.

c. Notice of Breach. Notwithstanding the foregoing, the Contractor shall, at least ten business days prior to declaring a breach of Contract by any Authorized User, by certified or registered mail, notify both the Commissioner and the purchasing official of the breaching Authorized User of the specific facts, circumstances and grounds upon which a breach will be declared.

d. Insufficient basis. If the Contractor's basis for declaring a breach is insufficient, the Contractor's declaration of breach and failure to service an Authorized User may constitute a breach of the Contract, and the Authorized User may thereafter seek any remedy available at law or equity.

51. <u>PROMPT PAYMENTS</u>

a. State Agencies Upon acceptance of Product or as otherwise provided by Contract, Contractor may invoice for payment. The required payment date shall be thirty (30) calendar days, excluding legal holidays, from the receipt of a proper invoice, as determined in accordance with State Finance Law §179-f(2) and 2 NYCRR Part 18. The payment of interest on certain payments due and owed by Agency may be made in accordance with State Finance Law §§179-d et. seq. and the implementing regulations (2 NYCRR §18.1 et seq.).

b. By Non-State Agencies Upon acceptance of Product or as otherwise provided by Contract, Contractor may invoice for payment. The required payment date shall be thirty calendar days,

(Continued)

excluding legal holidays, or as mandated by the appropriate governing law from the receipt of a proper invoice. The terms of Article 11-A of the State Finance Law apply only to procurements by and the consequent payment obligations of Agencies. Neither expressly nor by any implication is the statute applicable to Non-State Authorized Users. Neither OGS nor the State Comptroller is responsible for payments on any purchases made by a Non-State Agency Authorized User.

c. By Contractor Should the Contractor be liable for any payments to the State hereunder, interest, late payment charges and collection fee charges will be determined and assessed pursuant to Section 18 of the State Finance Law.

52. REMEDIES FOR BREACH It is understood and agreed that all rights and remedies afforded below shall be in addition to all remedies or actions otherwise authorized or permitted by law:

a. Cover/Substitute Performance In the event of Contractor's material, uncured breach, the Commissioner may, with or without formally Bidding: (i) Purchase from other sources; or (ii) If the Commissioner is unsuccessful after making reasonable attempts, under the circumstances then-existing, to timely obtain acceptable service or acquire replacement Product of equal or comparable quality, the Commissioner may acquire acceptable replacement service or Product of lesser or greater quality.

Such purchases may be deducted from the Contract quantity without penalty or liability to the State. The Commissioner agrees that Authorized Users shall accept allocated performance or deliveries during a period where Contractor is making good faith efforts to cure a material breach.

b. Withhold Payment In any case where a reasonable question of material, uncured non-performance by Contractor arises, payment may be withheld in whole or in part at the discretion of the Commissioner. Should Contractor and the Commissioner fail to agree upon the question of "materiality" in an instance of non-performance, such failure to agree shall be a dispute under the Disputes clause.

c. Bankruptcy In the event that the Contractor files, or there is filed against Contractor, a petition under the U.S. Bankruptcy Code during the term of this Centralized Contract, Authorized Users may, at their discretion, make application to exercise its right to set-off against monies due the Debtor or, under the Doctrine of Recoupment, be credited the amounts owed by the Contractor arising out of the same transactions.

d. Reimbursement of Costs Incurred The Contractor agrees to reimburse the Authorized User promptly for any and all additional costs and expenses incurred for acquiring acceptable services, and/or replacement Product. Should the cost of cover be less than the Contract price, the Contractor shall have no claim to the difference. The Contractor covenants and agrees that in the event suit is successfully prosecuted for any default on the part of the Contractor, all costs and expenses, including reasonable attorney's fees awarded by a court of competent jurisdiction, shall be paid by the Contractor.

Where the Contractor fails to timely deliver pursuant to the guaranteed delivery terms of the Contract, the ordering Authorized User may obtain substitute Product temporarily and the cost of the replacement Product shall be deducted from the Contract quantity without penalty or liability to the State.

e. Deduction/Credit Sums due as a result of these remedies may be deducted or offset by the Authorized User from payments due, or to become due, the Contractor on the same or another transaction. If no deduction or only a partial deduction is made in such fashion the Contractor shall pay to the Authorized User the amount of such claim or portion of the claim still outstanding, on demand. The Commissioner reserves the right to determine the disposition of any rebates, settlements, restitution, damages, etc., that arise from the administration of the Contract.

53. ASSIGNMENT OF CLAIM Contractor hereby assigns to the State any and all claims for overcharges associated with this Contract that may arise under the antitrust laws of the United States, 15 USC Section 1, et. seq. and the antitrust laws of the State of New York, General Business Law Section 340, et. seq.

54. TOXIC SUBSTANCES Each Contractor furnishing a toxic substance, as defined by Section 875 of the Labor Law, shall provide such Authorized User with not less than two copies of a Material Safety Data Sheet, which sheet shall include for each such substance the information outlined in Section 876 of the Labor Law.

Before any chemical product is used or applied on or in any building, a copy of the product label and Material Safety Data Sheet must be provided to and approved by the Authorized User representative.

55. INDEPENDENT CONTRACTOR It is understood and agreed that the legal status of the Contractor, its agents, officers and employees under this Contract is that of an independent Contractor, and in no manner shall they be deemed employees of the Authorized User, and therefore are not entitled to any of the benefits associated with such employment.

56. SECURITY Contractor warrants, covenants and represents that it will comply fully with all security procedures of the Authorized User(s) in performance of the Contract including but not limited to physical, facility, documentary and cyber security rules, procedures and protocols.

57. COOPERATION WITH THIRD PARTIES The Contractor shall be responsible for fully cooperating with any third party, including but not limited to other Contractors or Subcontractors of the Authorized User, as necessary to ensure delivery or performance of Product.

58. CONTRACT TERM - RENEWAL In addition to any stated renewal periods in the Contract, any Contract or unit portion thereof let by the Commissioner may be extended by the Commissioner for an additional period(s) of up to one year with the written concurrence of the Contractor and Comptroller. Such extension may be exercised on a month-to-month basis or in other stated periods of time during the one year extension.

59. WARRANTIES

a. Product Performance Where Contractor, Product manufacturer or service provider generally offers additional or more advantageous warranties than set forth below, Contractor shall offer or pass through any such warranties to Authorized Users.

(Continued)

In addition, Contractor hereby warrants and represents that the Products acquired by the Authorized User under the terms and conditions of this Contract conform to the manufacturer's specifications, performance standards and documentation, and the documentation fully describes the proper procedure for using the Products.

Contractor further warrants and represents that Products, components or deliverables specified and furnished by or through Contractor shall individually, and where specified and furnished as a system, be free from defects in material and workmanship and will conform with all requirements of the Contract for the warranty period, or for a minimum of one (1) year from the date of acceptance, whichever is longer ("Project warranty period").

Unless recycled or recovered materials are available in accordance with the Remanufactured, Recycled, Recyclable or Recovered Materials clause, Product offered shall be standard new equipment, current model or most recent release of regular stock product with all parts regularly used with the type of equipment offered. Contractor further warrants and represents that no attachment or part has been substituted or applied contrary to the manufacturer's recommendations and standard practice.

b. Title and Ownership Contractor warrants and represents that it has (i) full ownership, clear title free of all liens, or (ii) the right to transfer or deliver specified license rights to any Products acquired by Authorized User under this Contract. Contractor shall be solely liable for any costs of acquisition associated therewith. Contractor shall indemnify Authorized Users and hold Authorized Users harmless from any damages and liabilities (including reasonable attorneys' fees and costs) awarded by a court of competent jurisdiction arising from any breach of Contractor's warranties as set forth herein.

c. Product Warranty for Deliverables During the Project warranty period, defects in the materials or workmanship of components or deliverables specified and furnished by or through Contractor shall be repaired or replaced by Contractor at no cost or expense to the Authorized User. Contractor shall extend the Project warranty period for individual component(s), or for the system as a whole, as applicable, by the cumulative period(s) of time, after notification, during which an individual component or the system requires servicing or replacement (down time) or is in the possession of the Contractor, its agents, officers, Subcontractors, distributors, resellers or employees ("extended warranty").

Where Contractor, the Independent Software Vendor (ISV), or other third-party manufacturer markets any project deliverable delivered by or through Contractor with a standard commercial warranty, such standard warranty shall be in addition to, and not relieve the Contractor from, Contractor's warranty obligations during the Project warranty and extended warranty period(s). Where such standard commercial warranty covers all or some of the Project warranty or extended warranty period(s), Contractor shall be responsible for the coordination during the Project warranty or extended warranty period(s) with ISV or other third party manufacturer(s) for warranty repair or replacement of ISV or other third-party manufacturer's Product.

Where Contractor, ISV or other third-party manufacturer markets any Project Deliverable with a standard commercial warranty which goes beyond the Project warranty or extended warranty period(s), Contractor shall notify the Authorized User and pass through the manufacturer's standard commercial warranty to Authorized User at no additional charge; provided, however, that Contractor shall not be responsible for coordinating services under the third-party extended warranty after expiration of the Project warranty and extended warranty period(s).

The Commissioner agrees that Contractor is not responsible for any modification of the Products made by an Authorized User without Contractor's approval.

d. Replacement Parts Warranty If during the regular or extended warranty periods, parts or components break or fail to perform as intended, the Contractor shall promptly repair or, upon demand, replace the defective unit or component part affected. All costs for labor and material and transportation incurred to repair or replace defective Product during the warranty period(s) shall be borne solely by the Contractor, and the State or Authorized User shall in no event be liable or responsible therefor.

Any Product or parts thereof replaced by the Contractor under the Contract warranty shall be replaced at no cost to the Authorized User and guaranteed for the greater of: a) the Warranty Period set forth under paragraph (a) above; or b) if a separate warranty for that Product or parts thereof is generally offered by the manufacturer, the standard commercial warranty period offered by the manufacturer for the individual part or component.

e. Virus Warranty The Contractor represents and warrants that any Licensed Software acquired by the Authorized User does not contain any known viruses. Contractor is not responsible for viruses introduced at Licensee's site.

f. Date/Time Warranty Contractor warrants that Product furnished pursuant to this Contract shall, when used in accordance with the Product documentation, be able to accurately process date/time data (including, but not limited to, calculating, comparing, and sequencing) transitions, including leap year calculations. Where a Contractor proposes or an acquisition requires that specific Products must perform as a package or system, this warranty shall apply to the Products as a system.

Where Contractor is providing ongoing services, including but not limited to: i) consulting, integration, code or data conversion, ii) maintenance or support services, iii) data entry or processing, or iv) contract administration services (e.g., billing, invoicing, claim processing), Contractor warrants that services shall be provided in an accurate and timely manner without interruption, failure or error due to the inaccuracy of Contractor's business operations in processing date/time data (including, but not limited to, calculating, comparing, and sequencing) various date/time transitions, including leap year calculations. Contractor shall be responsible for damages resulting from any delays, errors or untimely performance resulting therefrom, including but not limited to the failure or untimely performance of such services.

This Date/Time Warranty shall survive beyond termination or expiration of this contract as long as the Product is used by the governmental entity, or its successor, for whom the Product was originally purchased." Nothing in this warranty statement shall

(Continued)

be construed to limit any rights or remedies otherwise available under this Contract for breach of warranty.

g. Workmanship Warranty Contractor warrants that the services acquired under this Contract will be provided in a professional and workmanlike manner in accordance with industry standards. The Authorized User must notify Contractor of any services warranty deficiencies within ninety calendar days from performance of the services that gave rise to the warranty claim.

h. Miscellaneous The Authorized User shall promptly notify the Contactor and the Commissioner in writing of any claim of breach of any warranty provided herein.

The rights and remedies of the State and the Authorized Users provided in this clause are in addition to and do not limit any rights afforded to the State and the Authorized Users by any other clause of the Contract.

60. LEGAL COMPLIANCE Contractor represents and warrants that it shall secure all notices and comply with all applicable laws, ordinances, rules and regulations of any governmental entity in conjunction with the performance of obligations under the Contract. Prior to award and during the Contract term and any renewals thereof, Contractor must establish to the satisfaction of the Commissioner that it meets or exceeds all requirements of the Bid and Contract and any applicable laws, including but not limited to, permits, licensing, and shall provide such proof as required by the Commissioner. Failure to comply or failure to provide proof may constitute grounds for the Commissioner to terminate or suspend the Contract, in whole or in part, or to take any other action deemed necessary by the Commissioner. Contractor also agrees to disclose information and provide affirmations and certifications to comply with Sections 139-j and 139-k of the State Finance Law.

61. INDEMNIFICATION Contractor shall be fully liable for the actions of its agents, employees, partners or Subcontractors and shall fully defend, indemnify and hold harmless the Authorized Users from suits, actions, damages and costs of every name and description relating to personal injury and damage to real or personal tangible property caused by any intentional act or negligence of Contractor, its agents, employees, partners or Subcontractors, which shall arise from or result directly or indirectly from this Contract, without limitation; provided, however, that the Contractor shall not indemnify to the extent any claim, loss or damage arising hereunder solely due to the negligent act, failure to act, gross negligence or willful misconduct of the Authorized Users.

The Commissioner shall give Contractor: (i) prompt written notice of any action, claim or threat of suit, or other suit, (ii) the opportunity to take over, settle or defend such action, claim or suit at Contractor's sole expense, and (iii) assistance in the defense of any such action, claim or suit at the expense of Contractor.

In the event that an action or proceeding at law or in equity is commenced against the Authorized User arising out of a claim for death, personal injury or damage to real or personal tangible property caused by any intentional or willful act, gross negligence, or negligence of Contractor, its agents, employees, partners or Subcontractors, which shall arise from or result directly or indirectly from the Products supplied under this Contract, and Contractor is of the opinion that the allegations in such action in whole or in part are not covered by the indemnification and defense provisions set forth in the Contract, Contractor shall immediately notify the Authorized User and the New York State Office of the Attorney General in writing and shall specify to what extent Contractor believes it is obligated to defend and indemnify under the terms and conditions of the Contract and to what extent it is not so obligated to defend and indemnify. Contractor shall in such event attempt to secure a continuance to permit the State and the Authorized User to appear and defend their interests in cooperation with Contractor, as is appropriate, including any jurisdictional defenses the State and Authorized User may have. In the event of a dispute regarding the defense, the Contractor and the Attorney General shall try to reach an amicable resolution, but the Attorney General shall have the final determination on such matters.

62. INDEMNIFICATION RELATING TO THIRD PARTY RIGHTS The Contractor will also defend, indemnify and hold the Authorized Users harmless from and against any and all damages, expenses (including reasonable attorneys' fees), claims, judgments, liabilities and costs in any action for infringement of a patent, copyright, trademark, trade secret or other proprietary right provided: a) such claim arises solely out of the Products as supplied by the Contractor, and not out of any modification to the Products made by Authorized User or by someone other than Contractor at the direction of the Authorized User without Contractor’s approval, or by reason of an off-the-shelf component; and b) Authorized User gives Contractor prompt written notice of any such action, claim suit or threat of suit alleging infringement.

At Authorized User’s option, Contractor may be given the opportunity to take over, settle or defend such action, claim or suit at Contractor's sole expense, and to provide assistance in the defense of any such action, claim or suit at the expense of Contractor.

Such indemnity shall only be applicable in the event of claims, judgments, liabilities and/or costs that may be finally assessed against Authorized User in any action for infringement of a patent, or of any copyright, trademark, trade secret or other third party proprietary right except to the extent such claims, judgments, liabilities and/or costs arise solely from the Authorized Users negligent act, failure to act, gross negligence or willful misconduct.

If usage of a Product shall be enjoined for any reason or if Contractor believes that it may be enjoined, Contractor shall have the right, at its own expense and sole discretion to take action in the following order of precedence: (i) to procure for the Authorized User the right to continue Usage (ii) to modify the service or Product so that usage becomes non-infringing, and is of at least equal quality and performance; or (iii) to replace such Product or parts thereof, as applicable, with non-infringing Product of at least eqal quality and performance. If the above remedies are not available, the parties shall terminate the Contract, in whole or in part as necessary and applicable, provided that the Authorized User is given a refund for any amounts paid for the period during which usage was not feasible.

In the event that an action at law or in equity is commenced against the Authorized User arising out of a claim that the Authorized User's use of the Product under the Contract infringes any patent, copyright, trademark, trade secret or proprietary right, and

(Continued)

Contractor is of the opinion that the allegations in such action in whole or in part are not covered by the indemnification and defense provisions set forth in the Contract, Contractor shall immediately notify the Authorized User and the Office of the Attorney General in writing and shall specify to what extent Contractor believes it is obligated to defend and indemnify under the terms and conditions of the Contract and to what extent it is not so obligated to defend and indemnify. Contractor shall in such event protect the interests of the Authorized User and seek to secure a continuance to permit the Authorized User to appear and defend their interests in cooperation with Contractor, as is appropriate, including any jurisdictional defenses the Authorized User may have. This constitutes the Authorized User's sole and exclusive remedy for patent infringement, or for infringement of any other third party proprietary right.

63. LIMITATION OF LIABILITY Except as otherwise set forth in the Indemnification clause and the Indemnification Relating to Third Party Rights clause, the limit of liability shall be as follows:

a. Contractor's liability for any claim, loss or liability arising out of, or connected with the Products provided, and whether based upon default, or other liability such as breach of contract, warranty, negligence, misrepresentation or otherwise, shall in no case exceed direct damages in: (i) an amount equal to two (2) times the charges specified in the Purchase Order for the Products and services, or parts thereof forming the basis of the Authorized User's claim (said amount not to exceed a total of twelve (12) months charges payable under the applicable Purchase Order) or (ii) five hundred thousand dollars ($500,000), whichever is greater.

b. The Authorized User may retain such monies from any amount due Contractor as may be necessary to satisfy any claim for damages, costs and the like asserted against the Authorized User unless Contractor at the time of the presentation of claim shall demonstrate to the Authorized User's satisfaction that sufficient monies are set aside by the Contractor in the form of a bond or through insurance coverage to cover associated damages and other costs.

c. Notwithstanding the above, neither the Contractor nor the Authorized User shall be liable for any consequential, indirect or special damages of any kind which may result directly or indirectly from such performance, including, without limitation, damages resulting from loss of use or loss of profit by the Authorized User, the Contractor, or by others.

64. DISPUTES

a. Informal Dispute Resolution Process

1. It is the policy of OGS to provide vendors with an opportunity to administratively resolve disputes, complaints or inquiries related to OGS bid solicitations, contract awards or contract administration. If the Parties are not able to resolve their dispute between themselves as set forth below, OGS encourages vendors to seek resolution of disputes through consultation with OGS staff. Such consultation is voluntary. All such matters will be accorded impartial and timely consideration. Interested parties may also file formal written disputes. A copy of the Dispute Resolution Procedures for Vendors may be obtained by contacting the person identified in the Contract as a designated contact or through the OGS website (www.ogs.ny.gov).

2. In the event there is a dispute or controversy under this Centralized Contract, the Contractor, OGS and Authorized User agree to exercise their best efforts to resolve the dispute as soon as possible. The Contractor, OGS and Authorized User shall, without delay, continue to perform their respective obligations under this Centralized Contract which are not affected by the dispute. Primary responsibility for resolving any dispute arising under this Centralized Contract shall rest with the Authorized User's Contractor Coordinators and the Contractor's Account Executive and the State & Local Government Regional General Manager.

3. In the event the Authorized User is dissatisfied with the Contractor's Products provided under this Centralized Contract, the Authorized User shall notify the Contractor in writing pursuant to the terms of the Contract. In the event the Contractor has any disputes with the Authorized User, the Contractor shall so notify the Authorized User in writing. If either party notifies the other of such dispute or controversy, the other party shall then make good faith efforts to solve the problem or settle the dispute amicably, including meeting with the party's representatives to attempt diligently to reach a satisfactory result.

4. If negotiation between such persons fails to resolve any such dispute to the satisfaction of the parties within fourteen (14) business days or as otherwise agreed to by the Contractor and Authorized User, of such notice, then the matter shall be submitted to the State's Contract Administrator and the Contractor's senior officer of the rank of Vice President or higher as its representative. Such representatives shall meet in person and shall attempt in good faith to resolve the dispute within the next fourteen (14) business days or as otherwise agreed to by the parties. This meeting must be held before either party may seek any other method of dispute resolution, including judicial or governmental resolutions. Notwithstanding the foregoing, this section shall not be construed to prevent either party from seeking and obtaining temporary equitable remedies, including injunctive relief.

5. The Contractor shall extend the dispute resolution period for so long as the Authorized User continues to make reasonable efforts to cure the breach, except with respect to disputes about the breach of payment of fees or infringement of its or its licensors' intellectual property rights.

b. Formal Disputes

1. Definitions

a. Filed means the complete receipt of any document by OGS before its close of business.

b. Dispute means a written objection by Contractor to any of the following:

i. A solicitation or other request by OGS for offers for a contract for the procurement of commodities or services.

ii. The cancellation of the solicitation or other request by OGS.

iii. An award or proposed award of the Contract by OGS.

iv. A termination or cancellation of an award of the Contract by OGS.

v. Changes in the Scope of the Centralized Contract by the Commissioner.

vi. Determination of "materiality" in an instance of nonperformance or contractual breach.

(Continued)

vii. An equitable adjustment in the Centralized Contract terms and/or pricing made by the Commissioner during a Force Majeure event.

2. Submission of Disputes

a. A formal dispute by Contractor must be filed in writing to OGS by mail, email or facsimile.

3. The dispute must include:

a. Name, address, e-mail address, fax and telephone numbers of the filer.

b. Solicitation or Contract number.

c. Detailed statement of the legal and factual grounds for the dispute, including a description of resulting prejudice to the filer.

d. Copies of relevant documents.

e. Request for a ruling by the agency.

f. Statement as to the form of relief requested.

g. All information establishing that the filer is an interested party for the purpose of filing a dispute.

h. All information establishing the timeliness of the dispute.

Disputes must be filed with the Director of OGS New York State Procurement (NYSPro) at the following address:

New York State Office of General Services
Director, NYSPro
38th Floor, Corning Tower
Empire State Plaza
Albany, NY 12242
Facsimile: (518) 486-6099

Disputes concerning the administration of the Contract after award must be filed within twenty (20) business days by Contractor after the Authorized User and Contractor fails to reach resolution through the Informal Dispute Resolution Process.

4. Agency Response

1. OGS will consider all information relevant to the dispute, and may, at its discretion, suspend, modify, or cancel the disputed procurement/Contract action prior to issuance of a formal dispute decision.

2. OGS reserves the right to require the Contractor to meet or participate in a conference call with OGS to discuss the dispute when, in its sole judgment, circumstances so warrant.

3. OGS reserves the right to waive or extend the time requirements for decisions and final determination on appeals herein prescribed when, in its sole judgment, circumstances so warrant.

4. OGS reserves the right to consider or reject the merits of any dispute.

5. Notice of Decision: A copy of the decision, stating the reason(s) upon which it is based and informing the filer of the right to appeal an unfavorable decision to the Chief Procurement Officer shall be sent to the filer or its agent by regular mail within thirty (30) business days of receipt of the dispute.

5. Appeals

a. Should the filer be dissatisfied with the dispute determination, a written appeal may be directed to:

Chief Procurement Officer
New York State Office of General Services
NYSPro
38th Floor, Corning Tower
Empire State Plaza
Albany, NY 12242
Facsimile: (518) 486-9166

b. Written notice of appeal of a determination must be received at the above address no more than ten (10) business days after the date the decision is received by the filer. The decision of the Director of NYSPro shall be a final and conclusive agency determination unless appealed to the Chief Procurement Officer within such time period.

c. The Chief Procurement Officer shall hear and make a final determination on all appeals or may designate a person or persons to act on his/her behalf. The final determination on the appeal shall be issued within twenty (20) business days of receipt of the appeal.

d. An appeal of the decision of the Director of NYSPro shall not include new facts and information unless requested in writing by the Chief Procurement Officer.

e. The decision of the Chief Procurement Officer shall be a final and conclusive agency determination.

6. Legal Appeals Nothing contained in these provisions is intended to limit or impair the rights of Contractor to seek and pursue remedies of law through the judicial process.

THE FOLLOWING CLAUSES PERTAIN TO TECHNOLOGY & NEGOTIATED CONTRACTS

65. SOFTWARE LICENSE GRANT Where Product is acquired on a licensed basis the following shall constitute the license grant:

a. License Scope Licensee is granted a non-exclusive, perpetual license to use, execute, reproduce, display, perform, or merge the Product within its business enterprise in the United States up to the maximum licensed capacity stated on the Purchase Order. Product may be accessed, used, executed, reproduced, displayed or performed up to the capacity measured by the applicable licensing unit stated on the Purchase Order (i.e., payroll size, number of employees, CPU, MIPS, MSU, concurrent user, workstation). Licensee shall have the right to use and distribute modifications or customizations of the Product to and for use by any Authorized Users otherwise licensed to use the Product, provided that any modifications, however extensive, shall not diminish Licensor's proprietary title or interest. No license, right or interest in any trademark, trade name, or service mark is granted hereunder.

b. License Term The License Term shall commence upon the License Effective Date, provided, however, that where an acceptance or trial period applies to the Product, the License Term shall be extended by the time period for testing, acceptance or trial.

c. Licensed Documentation If commercially available, Licensee shall have the option to require the Contractor to deliver, at Contractor's expense: (i) one (1) hard copy and one (1) master electronic copy of the Documentation in a mutually agreeable format; (ii) hard copy instructions for access by downloading from the Internet (iii) hard copies of the Product Documentation by type of license in the following amounts, unless otherwise mutually agreed:

(Continued)

- Individual/Named User License - one (1) copy per License
- Concurrent Users - 10 copies per site
- Processing Capacity - 10 copies per site

Software media must be in a format specified by the Authorized User, without requiring any type of conversion.

Contractor hereby grants to Licensee a perpetual license right to make, reproduce (including downloading electronic copies of the Product) and distribute, either electronically or otherwise, copies of Product Documentation as necessary to enjoy full use of the Product in accordance with the terms of license.

d. Product Technical Support & Maintenance Licensee shall have the option of electing the Product technical support and maintenance ("maintenance") set forth in the Contract by giving written notice to Contractor any time during the Centralized Contract term. Maintenance term(s) and any renewal(s) thereof are independent of the expiration of the Centralized Contract term and will not automatically renew.

Maintenance shall include, at a minimum, (i) the provision of error corrections, updates, revisions, fixes, upgrade and new releases to Licensee, and (ii) Help Desk assistance with locally accessible "800" or toll free, local telephone service, or alternatively on-line Help Desk accessibility. Contractor shall maintain the Products so as to provide Licensee with the ability to utilize the Products in accordance with the Product Documentation without significant functional downtime to its ongoing business operations during the maintenance term.

Authorized User shall not be required to purchase maintenance for use of Product, and may discontinue maintenance at the end of any current maintenance term upon notice to Contractor. In the event that Authorized User does not initially acquire or discontinues maintenance of licensed Product, it may, at any time thereafter, reinstate maintenance for Product without any additional penalties or other charges, by paying Contractor the amount which would have been due under the Contract for the period of time that such maintenance had lapsed, at then current NYS net maintenance rates.

e. Permitted License Transfers As Licensee's business operations may be altered, expanded or diminished, licenses granted hereunder may be transferred or combined for use at an alternative or consolidated site not originally specified in the license, including transfers between Agencies ("permitted license transfers"). Licensee(s) do not have to obtain the approval of Contractor for permitted license transfers, but must give thirty (30) days prior written notice to Contractor of such move(s) and certify in writing that the Product is not in use at the prior site. There shall be no additional license or other transfer fees due Contractor, provided that: i) the maximum capacity of the consolidated machine is equal to the combined individual license capacity of all licenses running at the consolidated or transferred site (e.g., named users, seats, or MIPS); or ii) if the maximum capacity of the consolidated machine is greater than the individual license capacity being transferred, a logical or physical partition or other means of restricting access will be maintained within the computer system so as to restrict use and access to the Product to that unit of licensed capacity solely dedicated to beneficial use for Licensee. In the event that the maximum capacity of the consolidated machine is greater than the combined individual license capacity of all licenses running at the consolidated or transferred site, and a logical or physical partition or other means of restricting use is not available, the fees due Contractor shall not exceed the fees otherwise payable for a single license for the upgrade capacity.

f. Restricted Use By Outsourcers / Facilities Management, Service Bureaus / or Other Third Parties Outsourcers, facilities management or service bureaus retained by Licensee shall have the right to use the Product to maintain Licensee's business operations, including data processing, for the time period that they are engaged in such activities, provided that: 1) Licensee gives notice to Contractor of such party, site of intended use of the Product, and means of access; and 2) such party has executed, or agrees to execute, the Product manufacturer's standard nondisclosure or restricted use agreement which executed agreement shall be accepted by the Contractor ("Non-Disclosure Agreement"); and 3) if such party is engaged in the business of facility management, outsourcing, service bureau or other services, such third party will maintain a logical or physical partition within its computer system so as to restrict use and access to the program to that portion solely dedicated to beneficial use for Licensee. In no event shall Licensee assume any liability for third party's compliance with the terms of the Non-Disclosure Agreement, nor shall the Non-Disclosure Agreement create or impose any liabilities on the State or Licensee.

Any third party with whom a Licensee has a relationship for a state function or business operation, shall have the temporary right to use Product (e.g., JAVA Applets), provided that such use shall be limited to the time period during which the third party is using the Product for the function or business activity.

g. Archival Back-Up and Disaster Recovery Licensee may use and copy the Product and related Documentation in connection with: i) reproducing a reasonable number of copies of the Product for archival backup and disaster recovery procedures in the event of destruction or corruption of the Product or disasters or emergencies which require Licensee to restore backup(s) or to initiate disaster recovery procedures for its platform or operating systems; ii) reproducing a reasonable number of copies of the Product and related Documentation for cold site storage. "Cold Site" storage shall be defined as a restorable back-up copy of the Product not to be installed until and after the declaration by the Licensee of a disaster; iii) reproducing a back-up copy of the Product to run for a reasonable period of time in conjunction with a documented consolidation or transfer otherwise allowed herein. "Disaster Recovery" shall be defined as the installation and storage of Product in ready-to-execute, back-up computer systems prior to disaster or breakdown which is not used for active production or development.

h. Confidentiality Restrictions The Product is a trade secret, copyrighted and proprietary product. Licensee and its employees will keep the Product strictly confidential, and Licensee will not disclose or otherwise distribute or reproduce any Product to anyone other than as authorized under the terms of Contract. Licensee will not remove or destroy any proprietary markings of Contractor.

i. Restricted Use by Licensee Except as expressly authorized by the terms of license, Licensee shall not:

(i) Copy the Product;

(Continued)

(ii) Cause or permit reverse compilation or reverse assembly of all or any portion of the Product;

(iii) Export the Licensed Software in violation of any U.S. Department of Commerce export administration regulations.

66. PRODUCT ACCEPTANCE Unless otherwise provided by mutual agreement of the Authorized User and the Contractor, Authorized User(s) shall have thirty (30) days from the date of delivery to accept hardware Products and sixty (60) days from the date of delivery to accept all other Product. Where the Contractor is responsible for installation, acceptance shall be from completion of installation. Title or other property interest and risk of loss shall not pass from Contractor to the Authorized User until the Products have been accepted. Failure to provide notice of acceptance or rejection or a deficiency statement to the Contractor by the end of the period provided for under this clause constitutes acceptance by the Authorized User(s) as of the expiration of that period. The License Term shall be extended by the time periods allowed for trial use, testing and acceptance unless the Commissioner or Authorized User agrees to accept the Product at completion of trial use.

Unless otherwise provided by mutual agreement of the Authorized User and the Contractor, Authorized User shall have the option to run testing on the Product prior to acceptance, such tests and data sets to be specified by User. Where using its own data or tests, Authorized User must have the tests or representative set of data available upon delivery. This demonstration will take the form of a documented installation test, capable of observation by the Authorized User, and shall be made part of the Contractor's standard documentation. The test data shall remain accessible to the Authorized User after completion of the test.

In the event that the documented installation test cannot be completed successfully within the specified acceptance period, and the Contractor or Product is responsible for the delay, Authorized User shall have the option to cancel the order in whole or in part, or to extend the testing period for an additional thirty (30) day increment. Authorized User shall notify Contractor of acceptance upon successful completion of the documented installation test. Such cancellation shall not give rise to any cause of action against the Authorized User for damages, loss of profits, expenses, or other remuneration of any kind.

If the Authorized User elects to provide a deficiency statement specifying how the Product fails to meet the specifications within the testing period, Contractor shall have thirty (30) days to correct the deficiency, and the Authorized User shall have an additional sixty (60) days to evaluate the Product as provided herein. If the Product does not meet the specifications at the end of the extended testing period, Authorized User, upon prior written notice to Contractor, may then reject the Product and return all defective Product to Contractor, and Contractor shall refund any monies paid by the Authorized User to Contractor therefor. Costs and liabilities associated with a failure of the Product to perform in accordance with the functionality tests or product specifications during the acceptance period shall be borne fully by Contractor to the extent that said costs or liabilities shall not have been caused by negligent or willful acts or omissions of the Authorized User's agents or employees. Said costs shall be limited to the amounts set forth in the Limitation of Liability Clause for any liability for costs incurred at the direction or recommendation of Contractor. When Product is not accepted, it must be removed by the Contractor from the premises of the Authorized User within ten calendar days of notification of non-acceptance by the Authorized User. Rejected items not removed by the Contractor within the ten calendar day period shall be regarded as abandoned by the Contractor and the Authorized User shall have the right to dispose of Product as its own property. The Contractor shall promptly reimburse the Authorized User for any costs incurred in storage or effecting removal or disposition after the ten calendar day period.

67. AUDIT OF LICENSED PRODUCT USAGE Contractor shall have the right to periodically audit, no more than annually, at Contractor's expense, use of licensed Product at any site where a copy of the Product resides provided that: (i) Contractor gives Licensee(s) at least thirty (30) days advance written notice, (ii) such audit is conducted during such party's normal business hours, (iii) the audit is conducted by an independent auditor chosen on mutual agreement of the parties. Contractor shall recommend a minimum of three (3) auditing/accounting firms from which the Licensee will select one (1). In no case shall the Business Software Alliance (BSA), Software Publishers Association (SPA), Software and Industry Information Association (SIIA) or Federation Against Software Theft (FAST) be used directly or indirectly to conduct audits, or be recommended by Contractor; (iv) Contractor and Licensee are each entitled to designate a representative who shall be entitled to participate, and who shall mutually agree on audit format, and simultaneously review all information obtained by the audit. Such representatives also shall be entitled to copies of all reports, data or information obtained from the audit; and (v) if the audit shows that such party is not in compliance, Licensee shall be required to purchase additional licenses or capacities necessary to bring it into compliance and shall pay for the unlicensed capacity at the NYS Net Price in effect at time of audit, or if none, then at the Contractor's U.S. Commercial list price. Once such additional licenses or capacities are purchased, Licensee shall be deemed to have been in compliance retroactively, and Licensee shall have no further liability of any kind for the unauthorized use of the software.

68. OWNERSHIP/TITLE TO PROJECT DELIVERABLES

a. Definitions

(i) For purposes of this clause, "Products." Deliverables furnished under this Contract by or through Contractor, including existing and custom Products, including, but not limited to: a) components of the hardware environment, b) printed materials (including but not limited to training manuals, system and user documentation, reports, drawings), whether printed in hard copy or maintained on diskette, CD, DVD or other electronic media c) third party software, d) modifications, customizations, custom programs, program listings, programming tools, data, modules, components, and e) any properties embodied therein, whether in tangible or intangible form (including but not limited to utilities, interfaces, templates, subroutines, algorithms, formulas, source code, object code).

(ii) For purposes of this clause, "Existing Products." Tangible Products and intangible licensed Products that exist prior to the commencement of work under the Contract. Contractor bears the burden of proving that a particular product was in existence prior to the commencement of the Project.

(iii) For purposes of this clause, "Custom Products." Products, preliminary, final or otherwise, which are created or

(Continued)

developed by Contractor, its Subcontractors, partners, employees or agents for Authorized User under the Contract.

b. Title to Project Deliverables Contractor acknowledges that it is commissioned by the Authorized User to perform the services detailed in the Purchase Order. Unless otherwise specified in writing in the Bid or Purchase Order, the Authorized User shall have ownership and license rights as follows:

(i) Existing Products:

1. Hardware - Title and ownership of Existing Hardware Product shall pass to Authorized User upon Acceptance.

2. Software - Title and ownership to Existing Software Product(s) delivered by Contractor under the Contract that is normally commercially distributed on a license basis by the Contractor or other independent software vendor proprietary owner ("Existing Licensed Product"), whether or not embedded in, delivered or operating in conjunction with hardware or Custom Products, shall remain with Contractor or the proprietary owner of other independent software vendor(s) (ISV). Effective upon acceptance, such Product shall be licensed to Authorized User in accordance with the Contractor or ISV owner's standard license agreement, provided, however, that such standard license, must, at a minimum: (a) grant Authorized User a non-exclusive, perpetual license to use, execute, reproduce, display, perform, adapt (unless Contractor advises Authorized User as part of Contractor's proposal that adaptation will violate existing agreements or statutes and Contractor demonstrates such to the Authorized User's satisfaction) and distribute Existing Licensed Product to the Authorized User up to the license capacity stated in the Purchase Order or work order with all license rights necessary to fully effect the general business purpose(s) stated in the Bid or Authorized User's Purchase Order or work order, including the financing assignment rights set forth in paragraph (c) below; and (b) recognize the State of New York as the licensee where the Authorized User is a state agency, department, board, commission, office or institution. Where these rights are not otherwise covered by the ISV's owner's standard license agreement, the Contractor shall be responsible for obtaining these rights at its sole cost and expense. The Authorized User shall reproduce all copyright notices and any other legend of ownership on any copies authorized under this clause.

(ii) Custom Products: Effective upon creation of Custom Products, Contractor hereby conveys, assigns and transfers to Authorized User the sole and exclusive rights, title and interest in Custom Product(s), whether preliminary, final or otherwise, including all trademark and copyrights. Contractor hereby agrees to take all necessary and appropriate steps to ensure that the Custom Products are protected against unauthorized copying, reproduction and marketing by or through Contractor, its agents, employees, or Subcontractors. Nothing herein shall preclude the Contractor from otherwise using the related or underlying general knowledge, skills, ideas, concepts, techniques and experience developed under a Purchase Order, project definition or work order in the course of Contractor's business. Authorized User may, by providing written notice thereof to the Contractor, elect in the alternative to take a non-exclusive perpetual license to Custom Products in lieu of Authorized User taking exclusive ownership and title to such Products. In such case, Licensee on behalf of all Authorized Users shall be granted a non-exclusive perpetual license to use, execute, reproduce, display, perform, adapt and distribute Custom Product as necessary to fully effect the general business purpose(s) as stated in paragraph (b)(i)(2), above.

c. Transfers or Assignments to a Third Party Financing Agent It is understood and agreed by the parties that a condition precedent to the consummation of the purchase(s) under the Contract may be the obtaining of acceptable third party financing by the Authorized User. The Authorized User shall make the sole determination of the acceptability of any financing proposal. The Authorized User will make all reasonable efforts to obtain such financing, but makes no representation that such financing has been obtained as of the date of Bid receipt. Where financing is used, Authorized User may assign or transfer its rights in Licensed Products (existing or custom) to a third party financing entity or trustee ("Trustee") as collateral where required by the terms of the financing agreement. Trustee's sole rights with respect to transferability or use of Licensed Products shall be to exclusively sublicense to Authorized User all of its Licensee's rights under the terms and conditions of the License Agreement; provided, further, however, in the event of any termination or expiration of such sublicense by reason of payment in full, all of Trustee's rights in such Licensed Product shall terminate immediately and Authorized User's prior rights to such Existing Licensed Product shall be revived.

d. Sale or License of Custom Products Involving Tax-Exempt Financing (i.e., Certificates of Participation - COPS) The Authorized User's sale or other transfer of Custom Products which were acquired by the Authorized User using third party, tax-exempt financing may not occur until such Custom Products are, or become, useable. In the event that the Contractor wishes to obtain ownership rights to Custom Product(s), the sale or other transfer shall be at fair market value determined at the time of such sale or other transfer, and must be pursuant to a separate written agreement in a form acceptable to the Authorized User which complies with the terms of this clause.

e. Contractor's Obligation with Regard to ISV (Third Party) Product Where Contractor furnishes Existing Licensed Product(s) as a Project Deliverable, and sufficient rights necessary to effect the purposes of this section are not otherwise provided in the Contractor or ISV's standard license agreement, Contractor shall be responsible for obtaining from the ISV third party proprietary owner/developer the rights set forth herein to the benefit of the Authorized User at Contractor's sole cost and expense.

69. <u>PROOF OF LICENSE</u> The Contractor must provide to each Licensee who places a Purchase Order either: (i) the Product developer's certified License Confirmation Certificates in the name of such Licensee; or (ii) a written confirmation from the Proprietary owner accepting Product invoice as proof of license. Contractor shall submit a sample certificate, or alternatively such written confirmation from the proprietary developer. Such certificates must be in a form acceptable to the Licensee.

70. <u>PRODUCT VERSION</u> Purchase Orders shall be deemed to reference Manufacturer's most recently released model or version of the Product at time of order, unless an earlier model or version is specifically requested in writing by Authorized User and Contractor is willing to provide such version.

71. <u>CHANGES TO PRODUCT OR SERVICE OFFERINGS</u>

a. Product or Service Discontinuance Where Contractor is the Product Manufacturer/Developer, and Contractor publicly announces to all U.S. customers ("date of notice") that a Product is being withdrawn from the U.S. market or that maintenance service or technical support provided by Contractor ("withdrawn

(Continued)

support") is no longer going to be offered, Contractor shall be required to: (i) notify the Commissioner, each Licensee and each Authorized User then under contract for maintenance or technical support in writing of the intended discontinuance; and (ii) continue to offer Product or withdrawn support upon the Contract terms previously offered for the greater of: a) the best terms offered by Contractor to any other customer, or b) not less than twelve (12) months from the date of notice; and (iii) at Authorized User's option, provided that the Authorized User is under contract for maintenance on the date of notice, either: provide the Authorized User with a Product replacement or migration path with at least equivalent functionality at no additional charge to enable Authorized User to continue use and maintenance of the Product.

In the event that the Contractor is not the Product Manufacturer, Contractor shall be required to: (i) provide the notice required under the paragraph above, to the entities described within five (5) business days of Contractor receiving notice from the Product Manufacturer, and (ii) include in such notice the period of time from the date of notice that the Product Manufacturer will continue to provide Product or withdraw support.

The provisions of this subdivision (a) shall not apply or eliminate Contractor's obligations where withdrawn support is being provided by an independent Subcontractor. In the event that such Subcontractor ceases to provide service, Contractor shall be responsible for subcontracting such service, subject to State approval, to an alternate Subcontractor.

b. **Product or Service Re-Bundling** In the event that Contractor is the Product manufacturer and publicly announces to all U.S. customers ("date of notice") that a Product or maintenance or technical support offering is being re-bundled in a different manner from the structure or licensing model of the prior U.S. commercial offering, Contractor shall be required to: (i) notify the State and each Authorized User in writing of the intended change; (ii) continue to provide Product or withdrawn support upon the same terms and conditions as previously offered on the then-current NYS Contract for the greater of: a) the best terms offered by Contractor to any other customer, or b) not less than twelve (12) months from the date of notice; and (iii) shall submit the proposed rebundling change to the Commissioner for approval prior to its becoming effective for the remainder of the Contract term. The provisions of this section do not apply if the Contractor is not the Product manufacturer.

72. NO HARDSTOP/PASSIVE LICENSE MONITORING Unless an Authorized User is otherwise specifically advised to the contrary in writing at the time of order and prior to purchase, Contractor hereby warrants and represents that the Product and all Upgrades do not and will not contain any computer code that would disable the Product or Upgrades or impair in any way its operation based on the elapsing of a period of time, exceeding an authorized number of copies, advancement to a particular date or other numeral, or other similar self-destruct mechanisms (sometimes referred to as "time bombs," "time locks," or "drop dead" devices) or that would permit Contractor to access the Product to cause such disablement or impairment (sometimes referred to as a "trap door" device). Contractor agrees that in the event of a breach or alleged breach of this provision that Authorized User shall not have an adequate remedy at law, including monetary damages, and that Authorized User shall consequently be entitled to seek a temporary restraining order, injunction, or other form of equitable relief against the continuance of such breach, in addition to any and all remedies to which Authorized User shall be entitled.

73. SOURCE CODE ESCROW FOR LICENSED PRODUCT If Source Code or Source Code escrow is offered by either Contractor or Product manufacturer or developer to any other commercial customers, Contractor shall either: (i) provide Licensee with the Source Code for the Product; or (ii) place the Source Code in a third party escrow arrangement with a designated escrow agent who shall be named and identified to the State, and who shall be directed to release the deposited Source Code in accordance with a standard escrow agreement acceptable to the State; or (iii) will certify to the State that the Product manufacturer/developer has named the State, acting by and through the Authorized User, and the Licensee, as a named beneficiary of an established escrow arrangement with its designated escrow agent who shall be named and identified to the State and Licensee, and who shall be directed to release the deposited Source Code in accordance with the terms of escrow. Source Code, as well as any corrections or enhancements to such source code, shall be updated for each new release of the Product in the same manner as provided above and such updating of escrow shall be certified to the State in writing. Contractor shall identify the escrow agent upon commencement of the Contract term and shall certify annually that the escrow remains in effect in compliance with the terms of this clause.

The State may release the Source Code to Licensees under this Contract who have licensed Product or obtained services, who may use such copy of the Source Code to maintain the Product.

(Continued)

INDEX

	Clause No.
A	
Advertising Results	13
Assignment	43
Assignment of Claim	53
Audit of Licensed Product Usage	67
B	
Bid Contents	7
Bid Evaluation	22
Bid Opening	4
Bid Submission	5
C	
Changes to Product or Service Offerings	71
Confidential/Trade Secret Materials	9
Contract Invoicing	49
Contract Creation/Execution	26
Contract Term - Renewal	58
Cooperation with Third Parties	57
D	
Default - Authorized User	50
Definitions	2
Disputes	64
Drawings	18
E	
Emergency Contracts	31
Employees/Subcontractors/Agents	42
Estimated/Specific Quantity Contracts	30
Ethics Compliance	1
Expenses Prior to Contract Execution	12
Extraneous Terms	8
I	
Indemnification	61
Indemnification Relating to Third Party Rights	62
Independent Contractor	55
Installation	40
International Bidding	3
L	
Late Bids Rejected	6
Legal Compliance	60
Limitation of Liability	63
M	
Modification of Contract Terms	28
N	
No Hardstop/Passive License Monitoring	72
O	
Ownership/Title to Project Deliverables	68
P	
Participation in Centralized Contracts	27
Performance/Bid Bond	45
Prevailing Wage Rates - Public Works and Building Services Contracts	10
Pricing	17
Procurement Card	20
Product Acceptance	66
Product Delivery	33
Product References	14
Product Substitution	38
Product Version	70
Products Manufactured in Public Institutions	16
Prompt Payments	51
Proof of License	69
Purchase Orders	32
Q	
Quantity Changes Prior to Award	24
R	
Rejected Product	39
Re-Weighing Product	37
Remanufactured, Recycled, Recyclable or Recovered Materials	15
Remedies for Breach	52
Repaired or Replaced Product/Components	41
S	
Samples	21
Savings/Force Majeure	48
Scope Changes	29
Security	56
Site Inspection	19
Shipping/Receipt of Product	35
Software License Grant	65
Source Code Escrow for Licensed Product	73
Subcontractors and Suppliers	44
Suspension of Work	46
T	
Taxes	11
Termination	47
Tie Bids	23
Timeframe for Offers	25
Title and Risk of Loss	36
Toxic Substances	54
W	
Warranties	59
Weekend and Holiday Deliveries	34

(continued)